MEDICAL CART COMPANY

PRODUCT CATALOGUE 2023

medicalcartcompany.hu

The **Medical Cart Company Ltd** was born in the year 2016 and being a proud Hungarian company, all products are designed in house and material sourced and manufactued locally or within Europe. We have a total commitment to reducing our carbon footprint.

We use materials which are 100% recyclable and ensure that all products have the ability to be refurbished after many years of use and adapted to the changing needs of users with minimal effort.

How to choose your cart ?

We have designed a range of bases to suit the requirements of your equipment and the accessories required to support good use and function. All products are available with and without height adjustment.

So how to choose

- Weight of the equipment to accessories to be supported
- Working height required
- Size of work surface
- Location of accessories

We have a standard range of carts which will suit most needs or alternatively we can design the cart to your needs.

We understand, that a standard mounting solution may not satisfy your need, so we offer a fast and affordable customisation service as well as an exclusive for you and OEM design service.

We are here to be part of your team, not just your supplier !

CONTENTS

MEDICAL CART COMPANY

BUDGIE RANGE 4
Our most lightweight and economic range.

GIRAFFE RANGE 26
Vertically built products in case there's no need for a work surface.

CHAMELEON RANGE 46
Moving workstations fit to use standing or sitting as well.

RHINO RANGE 68
The strongest carts built to carry heavy equipment.

DRAWERS 88

SNAKE RANGE 90
Lightweight circuit arms with the strength and flexibility to reach for distant accessories.

WALL MOUNT SOLUTIONS 92

DESK STANDS 95

POWER SOLUTIONS 96

COMPONENTS FOR SALE 98

BUDGIE
RANGE

CUSTOM COLOR

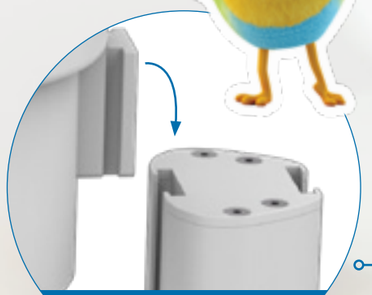

See 9. page

Range of Mounting Heads availabe.

Optional workspace. Can be mounted on the side or top of the column (Top option -> column height max 996mm).

Column can be fitted with a wide range of accessories.

20 kg maximum load capacity base.

optional 75 or 100 mm diameter antistatic wheels.

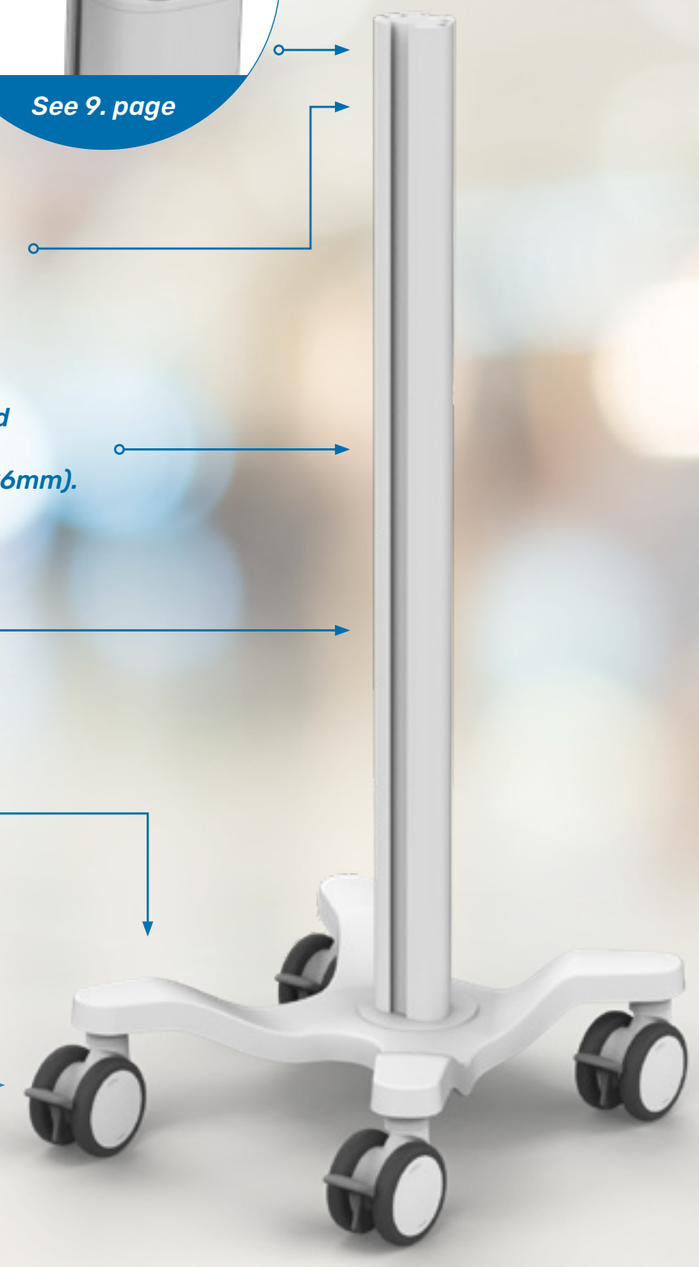

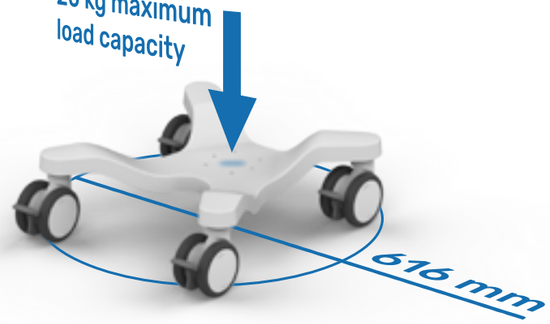

Click

MOUNT OPTIONS

Vesa Mount
DM5-C2

Tablet Mount
TM2-C2

Quick Release
QR2-C2

Quick Release
QR3-C2

COLUMN LENGTH OPTIONS

830 mm

995 mm

1050 mm

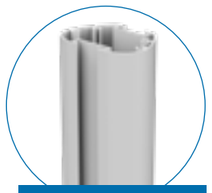

1500 mm

BASE/WHEEL OPTIONS

B1-W1

Ø 75 mm

B1-W4

Ø 100 mm

BUG-0

BASIC

See 08-09 page

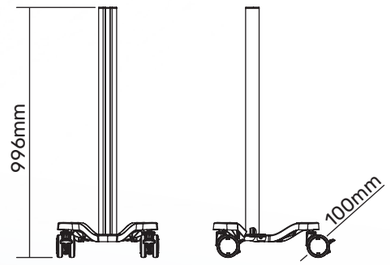

BUG-1

DISPLAY MOUNT

75 and 100 mm hole pattern

See 10-11 page

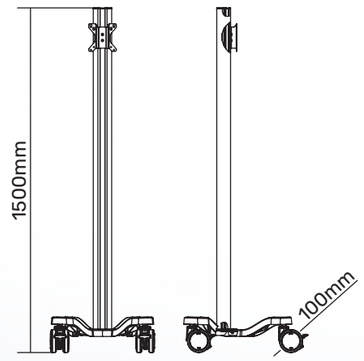

BUG-2

TABLET MOUNT

9-13'' or 13-15''

See 12-13 page

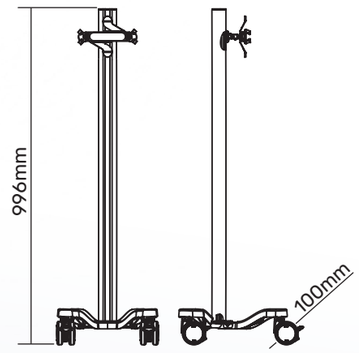

BUG-6

QUICK RELEASE MOUNT

See 14-15 page

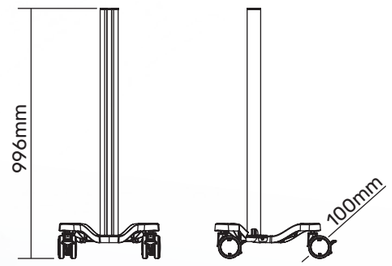

BUG-7

DRIP POLE

See 16-17 page

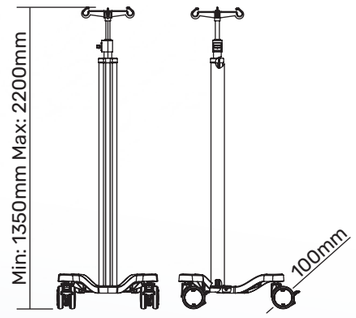

BUG-2-US0

ULTRASOUND

9-13'' or 13-15' '

See 18-19 page

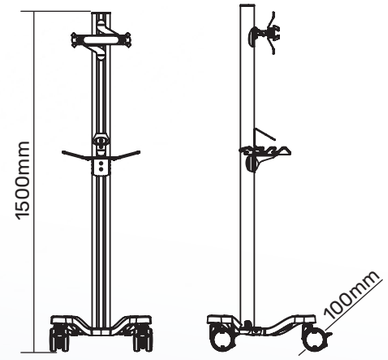

BUG-0-WS12

ULTRASOUND 2 EKG

See 20-21 page

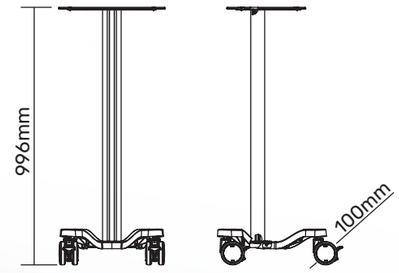

BUG-0-WS13

EKG

See 22-23 page

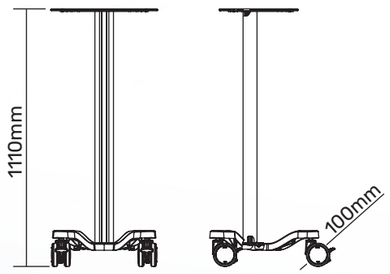

BUG-0

Basic Budgie Cart

Click

All pictures shown are for illustration purpose only.

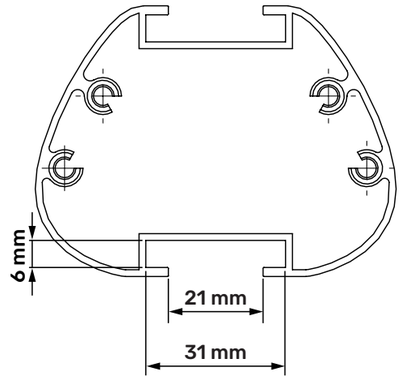

CART DATA

- ***The Column height is 995 mm. The column contains a standard 31x6 mm rail fo mounting the devices.***
- ***B1 616 diameter Base and optional 75 or 100mm wheel.***
- ***Max load capacity 20 kg / 44 lbs.***

Holder Options

- *SH1 - Scanner Holder*
- *IV1 - Drip Pole*
- *GH1 - Gel Holder*
- *MH1 - Mouse Holder*
- *DR1-C2 - DIN Rail*

DIN Rail options

- *DR1-C2*

Handle Options

- *H1-C2 - Handle*
- *ST5-C2 - Handle and Storage*

Shelf Options

- *S1-C2 - Shelf*
- *S2-C2 - Shelf*
- *S3-C2 - Shelf*

Storage Options

- *ST1-C2 - Small Basket*
- *ST2-C2 - Large Basket*
- *ST3-C2 - Storage Bin*

More accessories information see 24-25 page

BUG-1

Vesa Mount Budgie Cart

Click

All pictures shown are for illustration purpose only.

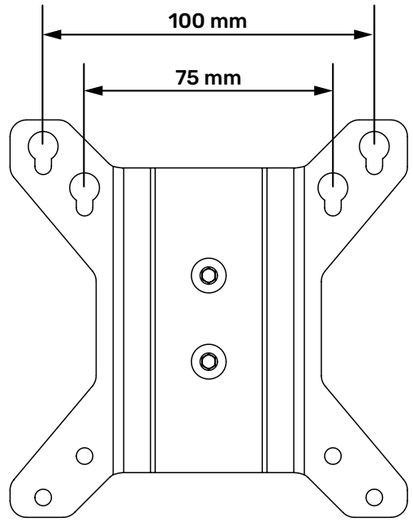

CART DATA

- ***The Column height is 1500mm and the vesa mount 75/100 mm hole pattern.***
- ***B1 616 diameter Base and optional 75 or 100mm wheel.***
- ***Max load capacity 20 kg / 44 lbs.***

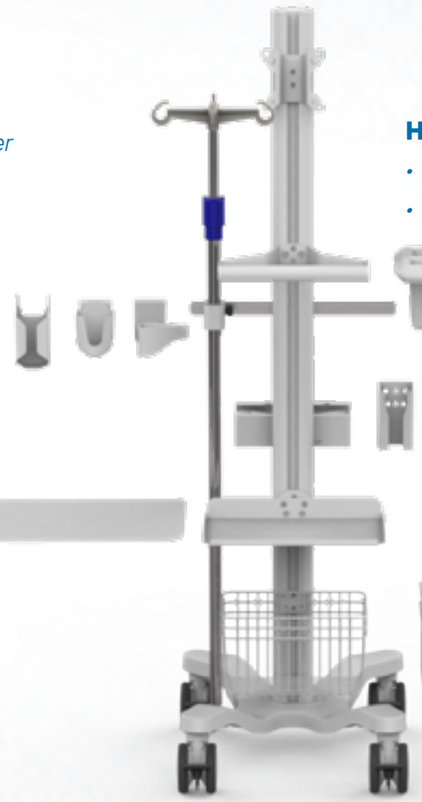

Holder Options

- *SH1 - Scanner Holder*
- *IV1 - Drip Pole*
- *GH1 - Gel Holder*
- *MH1 - Mouse Holder*
- *DR1-C2 - DIN Rail*

Handle Options

- *H1-C2 - Handle*
- *ST5-C2 - Handle and Storage*

PSU holder options

- *PSH1-C2*
- *PSH2-C2*

Shelf Options

- *S1-C2 - Shelf*
- *S2-C2 - Shelf*
- *S3-C2 - Shelf*

Storage Options

- *ST1-C2 - Small Basket*
- *ST2-C2 - Large Basket*
- *ST3-C2 - Storage Bin*

More accessories information see 24-25 page

BUG-2

Tablet Mount Budgie Cart

Click

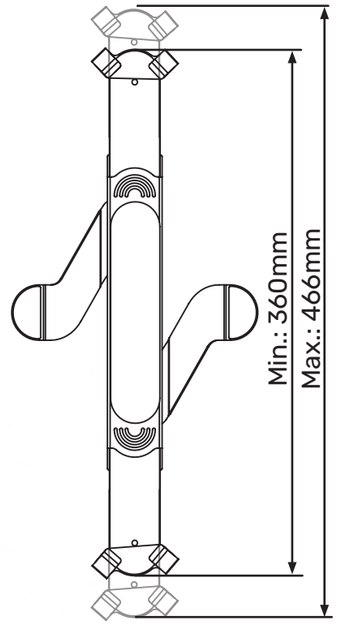

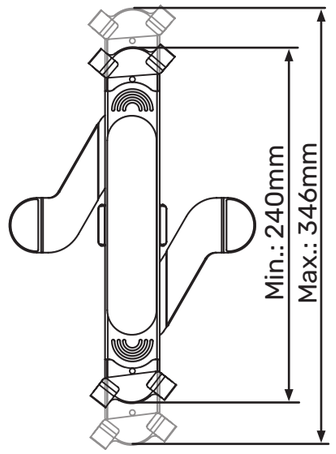

All pictures shown are for illustration purpose only.

CART DATA

- ***The Column height is 1500mm and the Tablet mount 9''-13'' or 13''-15''.***
- ***B1 616 diameter Base and optional 75 or 100mm wheel.***
- ***Max load capacity 20 kg / 44 lbs.***

Holder Options

- *SH1 - Scanner Holder*
- *IV1 - Drip Pole*
- *GH1 - Gel Holder*
- *MH1 - Mouse Holder*
- *DR1-C2 - DIN Rail*

Handle Options

- *H1-C2 - Handle*
- *ST5-C2 - Handle and Storage*

PSU holder options

- *PSH1-C2*
- *PSH2-C2*

Shelf Options

- *S1-C2 - Shelf*
- *S2-C2 - Shelf*
- *S3-C2 - Shelf*

Storage Options

- *ST1-C2 - Small Basket*
- *ST2-C2 - Large Basket*
- *ST3-C2 - Storage Bin*

More accessories information see 24-25 page

BUG-6

Quick Release Mount Budgie Cart

Click

CART DATA

- ***The Column height is 830mm.***
- ***B1 616 diameter Base and optional 75 or 100mm wheel.***
- ***Max load capacity 20 kg / 44 lbs.***

All pictures shown are for illustration purpose only.

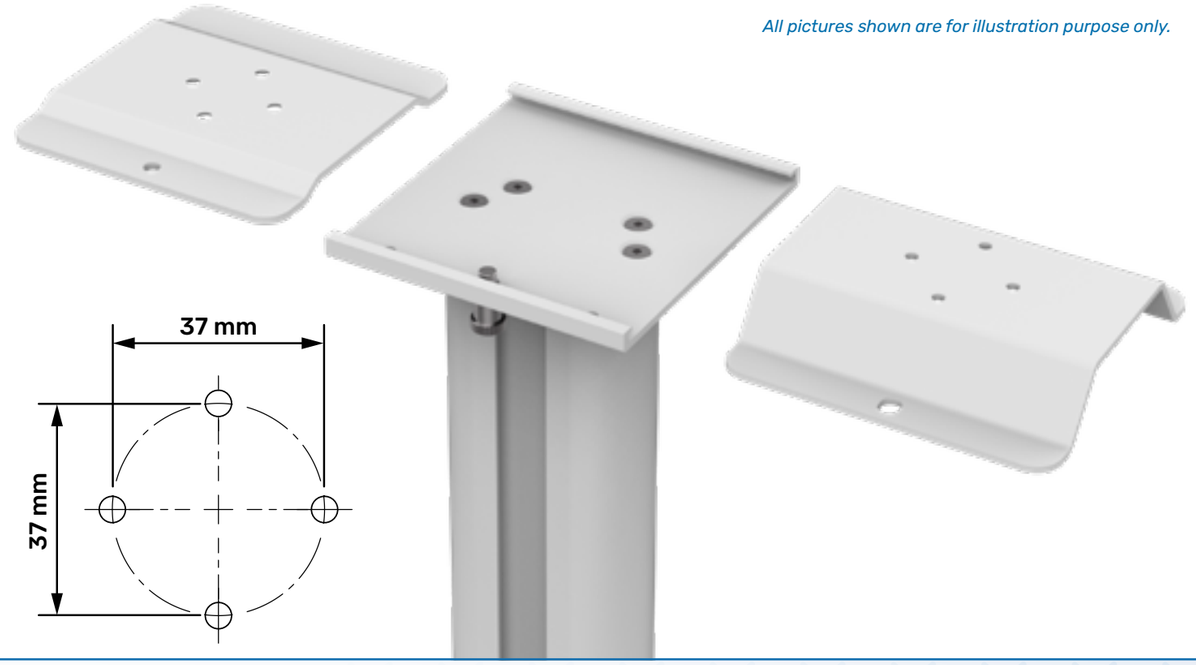

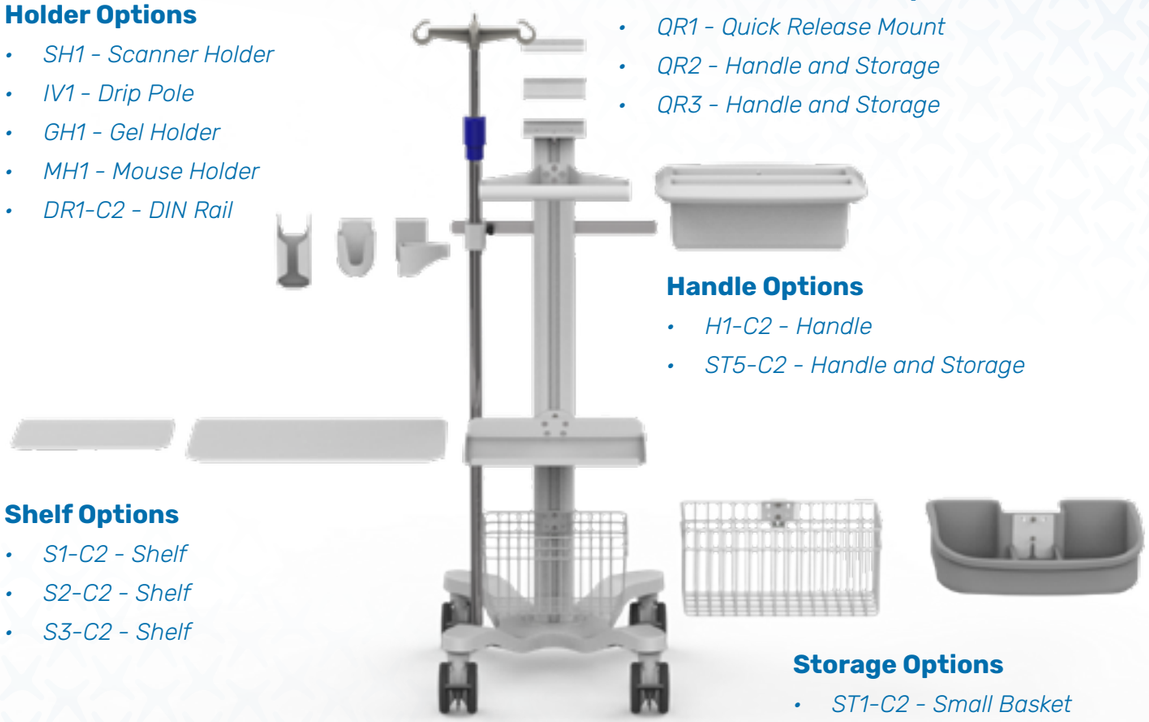

Holder Options

- *SH1 - Scanner Holder*
- *IV1 - Drip Pole*
- *GH1 - Gel Holder*
- *MH1 - Mouse Holder*
- *DR1-C2 - DIN Rail*

Quick Release Mount Options

- *QR1 - Quick Release Mount*
- *QR2 - Handle and Storage*
- *QR3 - Handle and Storage*

Handle Options

- *H1-C2 - Handle*
- *ST5-C2 - Handle and Storage*

Shelf Options

- *S1-C2 - Shelf*
- *S2-C2 - Shelf*
- *S3-C2 - Shelf*

Storage Options

- *ST1-C2 - Small Basket*
- *ST2-C2 - Large Basket*
- *ST3-C2 - Storage Bin*

More accessories information see 24-25 page

BUG-7

Drip Pole Budgie Cart

Click

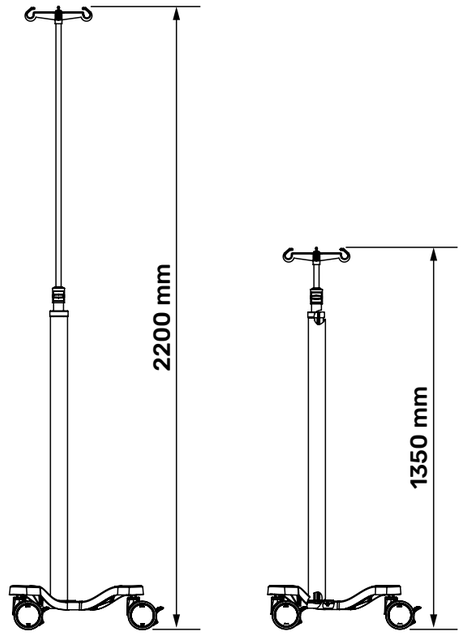

All pictures shown are for illustration purpose only.

Holder Options

- *SH1 - Scanner Holder*
- *IV1 - Drip Pole*
- *GH1 - Gel Holder*
- *MH1 - Mouse Holder*
- *DR1-C2 - DIN Rail*

Handle Options

- *H1-C2 - Handle*
- *ST5-C2 - Handle and Storage*

Shelf Options

- *S1-C2 - Shelf*
- *S2-C2 - Shelf*
- *S3-C2 - Shelf*

Storage Options

- *ST1-C2 - Small Basket*
- *ST2-C2 - Large Basket*
- *ST3-C2 - Storage Bin*

CART DATA

- ***The Column height is 996mm and the Drip Pole height Min: 1350mm Max: 2200mm.***
- ***B1 616 diameter Base and optional 75 or 100mm wheel.***
- ***Max load capacity 20 kg / 44 lbs.***

More accessories information see 24-25 page

BUG-2-US0

Ultrasound Budgie Cart

Click

All pictures shown are for illustration purpose only.

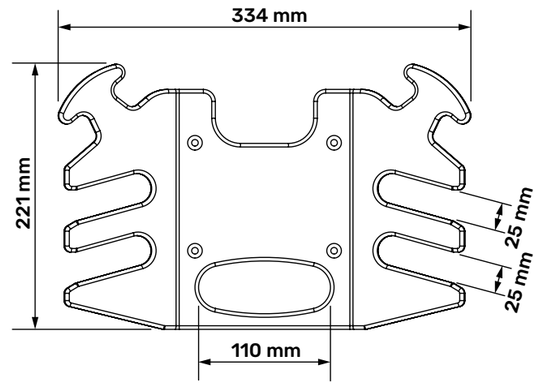

CART DATA

- ***The Column height is 1500mm.***
- ***B1 616 diameter Base and optional 75 or 100mm wheel.***
- ***Max load capacity 20 kg / 44 lbs.***

Holder Options

- *SH1 - Scanner Holder*
- *GH1 - Gel Holder*
- *MH1 - Mouse Holder*
- *DR1-C2 - DIN Rail*

PSU holder options

- *PSH1-C2 - PSU Holder*
- *PSH2-C2 - PSU Holder*

Shelf Options

- *S1-C2 - Shelf*
- *S2-C2 - Shelf*
- *S3-C2 - Shelf*

Storage Options

- *ST1-C2 - Small Basket*
- *ST2-C2 - Large Basket*
- *ST3-C2 - Storage Bin*

More accessories information see 24-25 page

BUG-0-WS12

Ultrasound Budgie Cart

Click

CART DATA

- ***The Column height is 996mm.***
- ***B1 616 diameter Base and optional 75 or 100mm wheel.***
- ***Max load capacity 20 kg / 44 lbs.***

All pictures shown are for illustration purpose only.

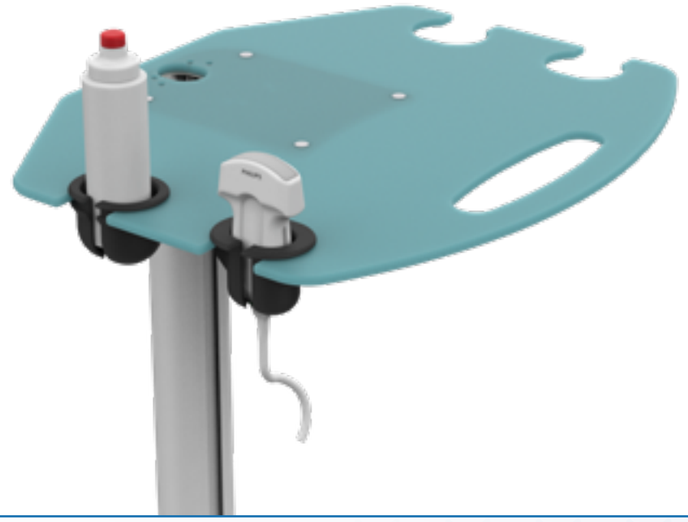

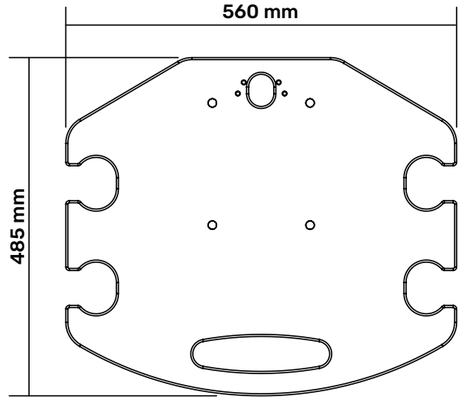

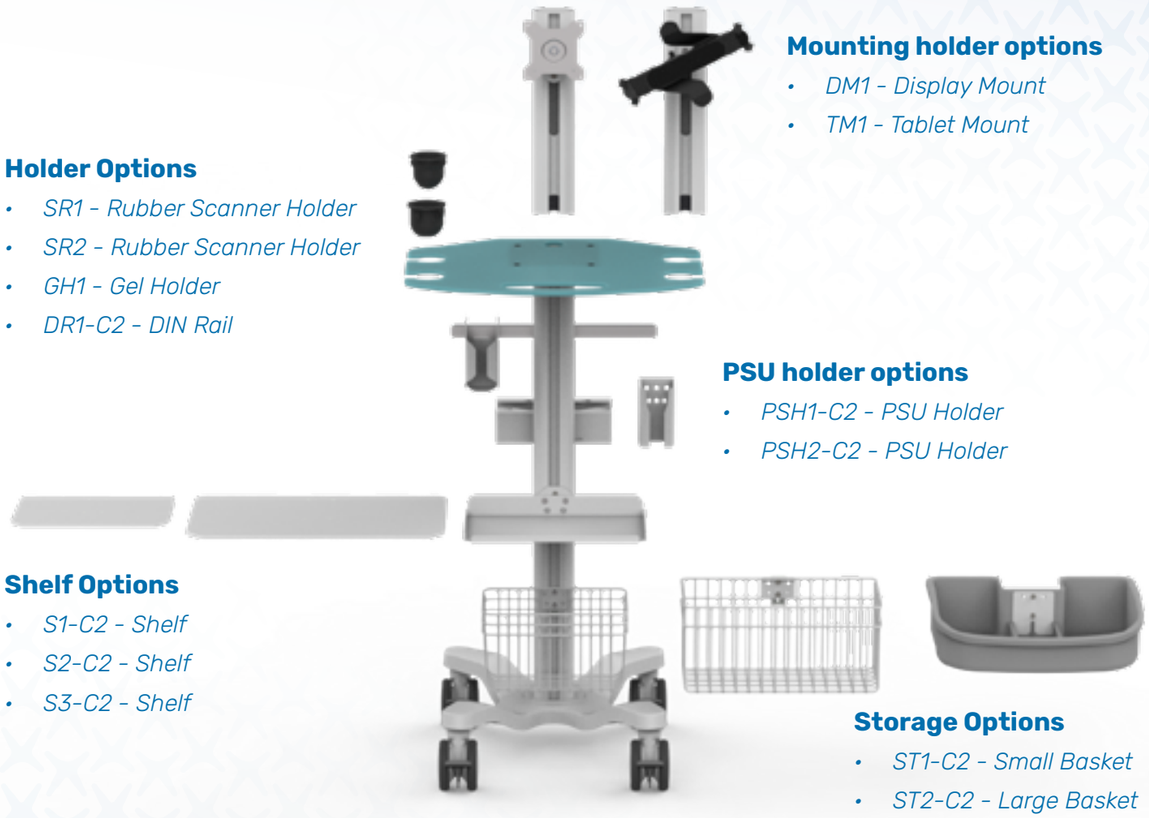

Mounting holder options

- *DM1 - Display Mount*
- *TM1 - Tablet Mount*

Holder Options

- *SR1 - Rubber Scanner Holder*
- *SR2 - Rubber Scanner Holder*
- *GH1 - Gel Holder*
- *DR1-C2 - DIN Rail*

PSU holder options

- *PSH1-C2 - PSU Holder*
- *PSH2-C2 - PSU Holder*

Shelf Options

- *S1-C2 - Shelf*
- *S2-C2 - Shelf*
- *S3-C2 - Shelf*

Storage Options

- *ST1-C2 - Small Basket*
- *ST2-C2 - Large Basket*
- *ST3-C2 - Storage Bin*

More accessories information see 24-25 page

BUG-0-WS13

EKG Budgie Cart

Click

All pictures shown are for illustration purpose only.

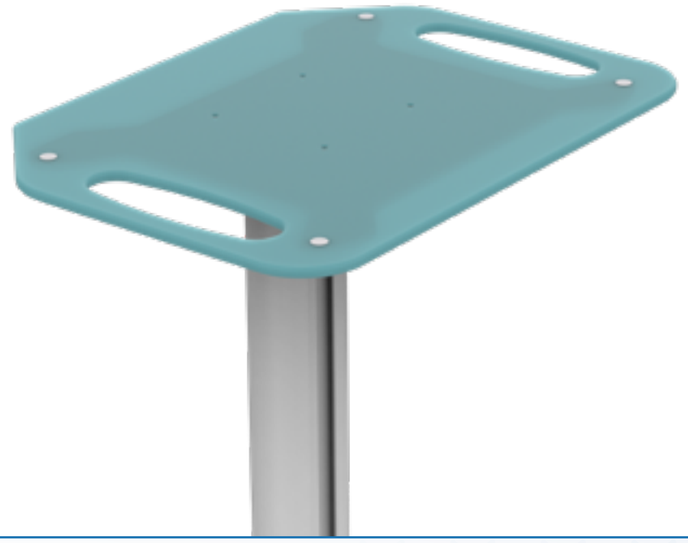

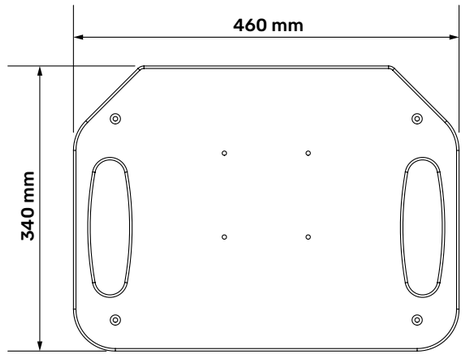

CART DATA

- *The Column height is 996mm.*
- *B1 616 diameter Base and optional 75 or 100mm wheel.*
- *Max load capacity 20 kg / 44 lbs.*

Holder Options

- *DR1-C2 - Din Rail*
- *GH1 - Gel Holder*

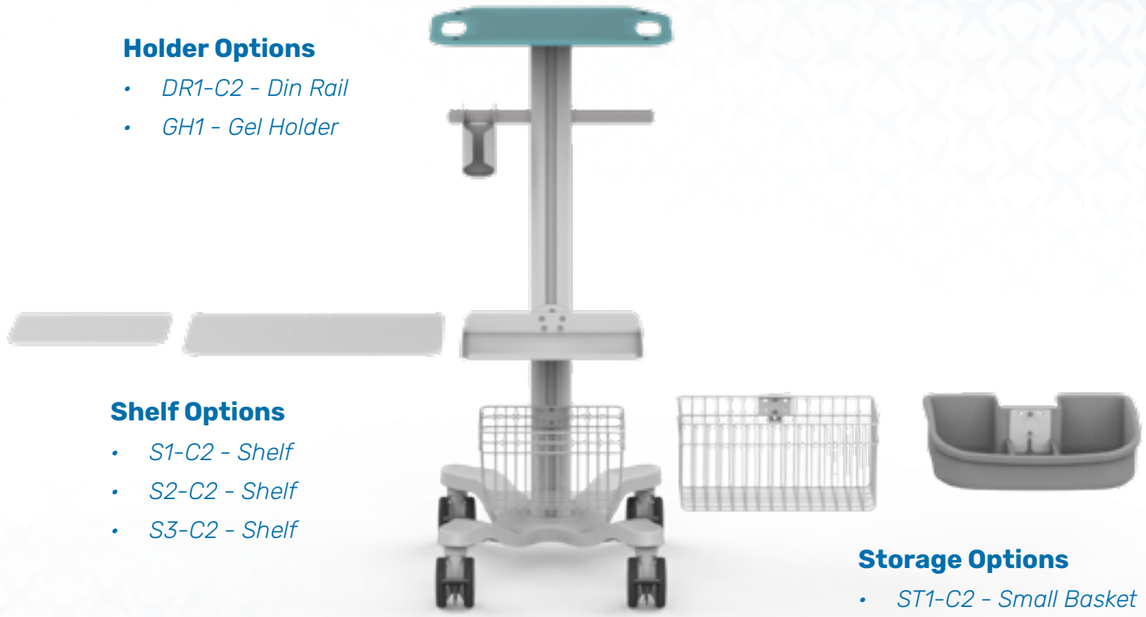

Shelf Options

- *S1-C2 - Shelf*
- *S2-C2 - Shelf*
- *S3-C2 - Shelf*

Storage Options

- *ST1-C2 - Small Basket*
- *ST2-C2 - Large Basket*
- *ST3-C2 - Storage Bin*

More accessories information see 24-25 page

Budgie range accessories

Quick Rlease Plate options

Quick Release Plate BM
QRA1-C2

Quick Release Plate
QRA2-C2

CPU Mount options

CPU Mount Small
CPU1-C2

CPU Mount Medium
CPU2-C2

Holder options

Mouse Holder
MH1

Scanner Holder 1
SH1

Scanner Holder 2
SH2

Gel Holder 1
GH1

Gel Holder 3
GH3

Cable Hook
CH1-C2

Rubber Scanner Holder
SR1

Rubber Scanner Holder
SR2

Gel Holder 2
GH2

Storage options

Small Basket
ST1-C2

Large Basket
ST2-C2

Storage Bin
ST3-C2

Handle and Storage
ST5-C2

Drip Pole Clamp and Drip Pole options

Drip Pole Clamp 12,7mm
DRC1

Drip Pole Clamp 25mm
DRC2

Drip Pole
IV1

DIN Rail options

Din Rail 400x10x25mm
DR3-C2

PSU Holder options

PSU Holder 1
PSH1-C2

PSU Holder 2
PSH2-C2

PSU Holder 4
PSH4-C2

PSU Holder 5
PSH5-C2

PSU Holder 7
PSH7-C2

Shelf options

Shelf 1
S1-C2

Shelf 2
S2-C2

Shelf 3
S3-C2

Handle options

Handle
H1-C2

Component options

Base
B1

75 mm Wheel
GJM3-75-2-W1

100 mm Wheel
GJM3-100-2-W4

Anti-static 75 mm Wheel
GJM3-75-2-W1

Anti-static 100 mm Wheel
GJM3-100-2-W6

995 mm column
C2-L3

1050 mm column
C2-L4

1500 mm column
C2-L6

GIRAFFE
RANGE

CUSTOM COLOR

See 31. page

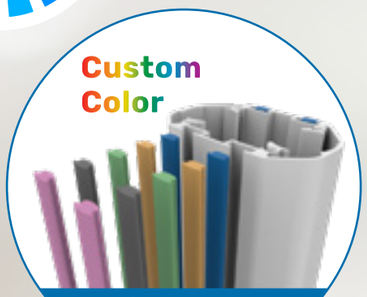

Optional Rubber Inserts

Optional head or mounting. (Tablet mount, Display mount, Quick Release head)

Optional workspace. Can be mounted on the side or top of the column (Top option -> column height max 996mm).

Column can be fitted with a wide range of accessories.

36 kg maximum load capacity base.

Optional 100 or 125 mm diameter antistatic wheels.

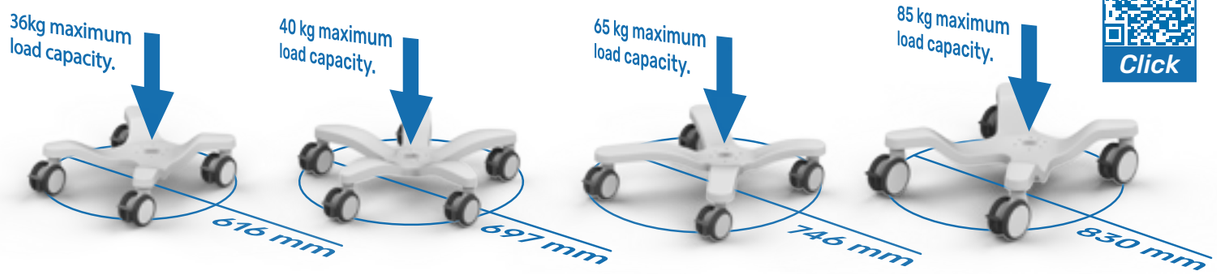

Click

MOUNT OPTIONS

Display Mount
DM1

Tablet Mount
TM1

Quick Release
QR1

Custom Tops

COLUMN OPTIONS

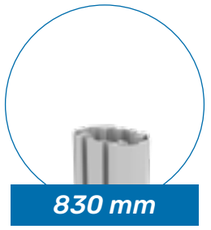

830 mm

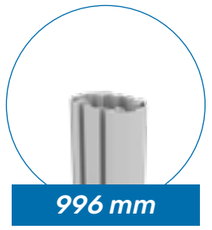

996 mm

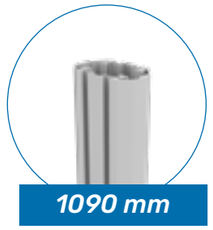

1090 mm

BASE AND WHEEL OPTIONS

GIR4
B1

ϴ 100 mm

GIR5
B5

ϴ 100 or 125 mm

GIR6
B3

ϴ 100 or 125 mm

GIR7
B4

ϴ 100 or 125 mm

GIR4-0

BASIC

See 30-31 page

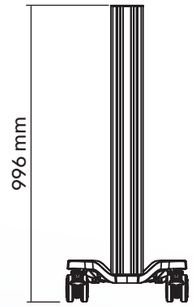

GIR4-1

DISPLAY MOUNT

75 and 100 mm
hole pattern

See 32-33 page

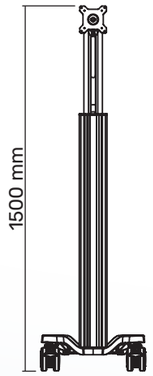

GIR4-2

TABLET MOUNT

9-13' or 13-15'

See 34-35 page

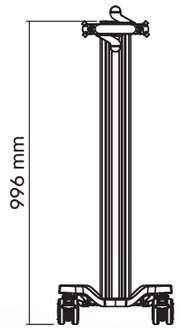

GIR4-6

QUICK RELEASE MOUNT

See 36-37 page

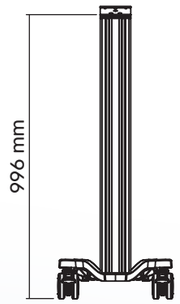

GIR6-V0

VENTILLATOR CART

See 38-39 page

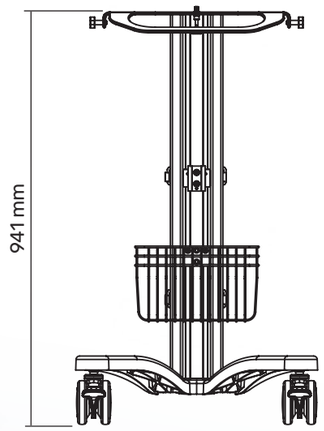

GIR7-6-G

TWIN GAS BOTTLE

Suitable for holding 2 x 10l
gas bottles

See 40-41 page

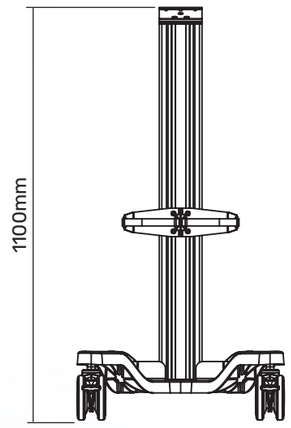

GIR7-AV0

AV CART

See 42-43 page

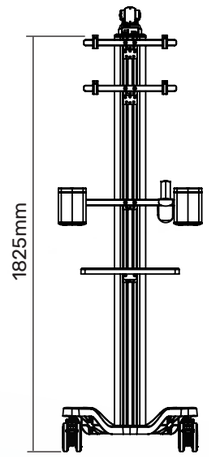

GIR-0

Basic Giraffe Cart

GIR4-0

The Column height is 996 mm. The column contains a standard 2 pcs 15x5,5 mm rail fo mounting the devices.

B1 616mm diameter Base and optional 100 wheel.

Max load capacity 36 kg / 79 lbs.

Scan or Click

GIR5-0

The Column height is 996 mm. The column contains a standard 2 pcs 15x5,5 mm rail fo mounting the devices.

B5 697mm diameter Base and optional 100 or 125 mm wheel.

Max load capacity 40 kg / 88 lbs.

Scan or Click

GIR6-0

The Column height is 996 mm. The column contains a standard 2 pcs 15x5,5 mm rail fo mounting the devices.

B3 746mm diameter Base and optional 100 or 125 mm wheel.

Max load capacity 65 kg / 143 lbs.

Scan or Click

GIR7-0

The Column height is 996 mm. The column contains a standard 2 pcs 15x5,5 mm rail fo mounting the devices.

B4 830mm diameter Base and optioal 100 or 125 mm wheel.

Max load capacity 85 kg / 187 lbs.

Scan or Click

All pictures shown are for illustration purpose only.

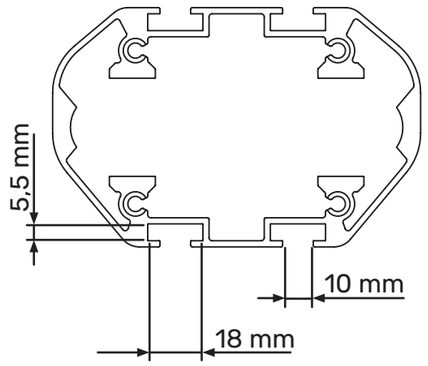

Click and Scan

Holder Options

- *S1 - Scanner Holder*
- *IV1 - Drip Pole*
- *MH1 - Mouse Holder*
- *DR1-C5 - DIN Rail*

Handle Options

- *ST5-C5 - Storage and Plastic Bin*
- *H1-C5 - Handle*

Shelf Options

- *S1-C5 - Shelf*
- *S2-C5 - Shelf*
- *S3-C5 - Shelf*

Gas bottle Options

- *1-0166*
- *1-0268*

Storage Options

- *ST1-C5 - Small Basket*
- *ST2-C5 - Large Basket*
- *ST3-C5- Storage Bin*

More accessories information see 44-45 page

GIR-1

Display Mount Giraffe Cart

GIR4-1

The Column height is 1500 mm and the vesa mount 75/100 mm hole pattern.

B1 616mm diameter Base and optional 100 wheel.

Max load capacity 36 kg / 79 lbs.

Scan or Click

GIR5-1

The Column height is 1500 mm and the vesa mount 75/100 mm hole pattern.

B5 697mm diameter Base and optional 100 or 125 mm wheel.

Max load capacity 40 kg / 88 lbs.

Scan or Click

GIR6-1

The Column height is 1500 mm and the vesa mount 75/100 mm hole pattern.

B3 746mm diameter Base and optional 100 or 125 mm wheel.

Max load capacity 65 kg / 143 lbs.

Scan or Click

GIR7-1

The Column height is 1500 mm and the vesa mount 75/100 mm hole pattern.

B4 830mm diameter Base and optioal 100 or 125 mm wheel.

Max load capacity 85 kg / 187 lbs.

Scan or Click

All pictures shown are for illustration purpose only.

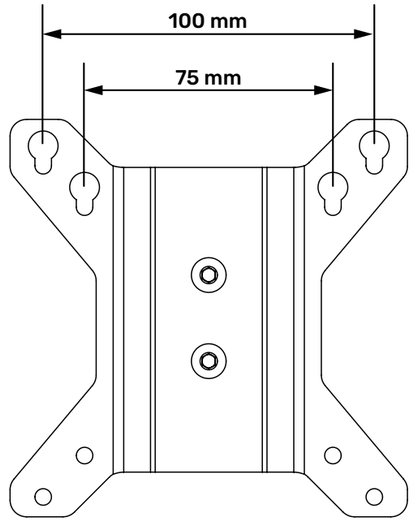

Click and Scan

Holder Options

- *S1 - Scanner Holder*
- *IV1 - Drip Pole*
- *GH1 - Gel Holder*
- *MH1 - Mouse Holder*
- *DR1-C5 - DIN Rail*

PSU Options

- *PSH1-C5 - PSU Holder*
- *PSH2-C5 - PSU Holder*

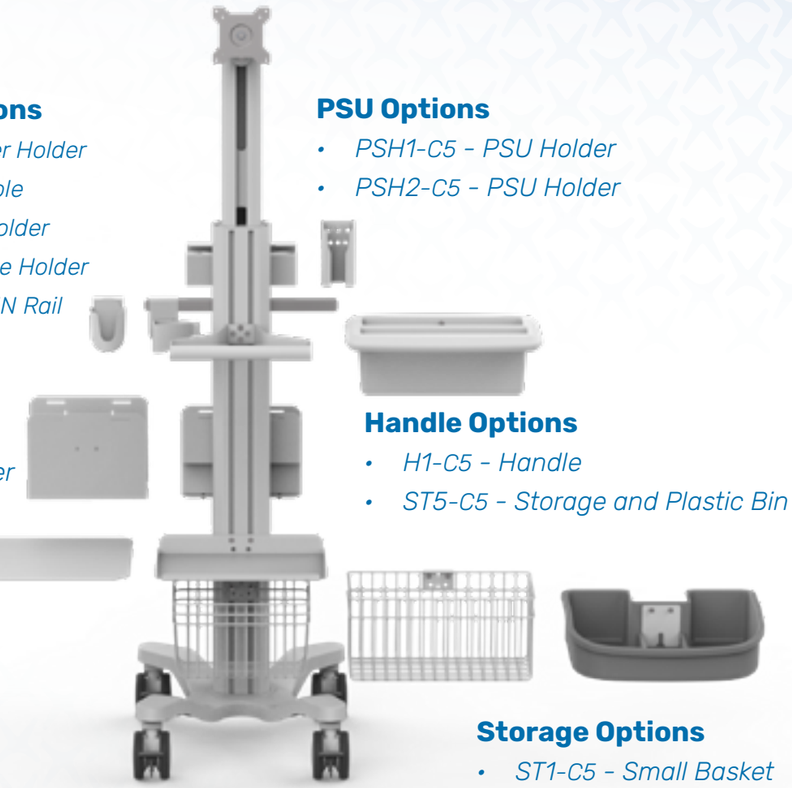

CPU Options

- *CPU1-C5 - Small CPU Holder*
- *CPU2-C5 - Medium CPU Holder*

Handle Options

- *H1-C5 - Handle*
- *ST5-C5 - Storage and Plastic Bin*

Shelf Options

- *S1-C5- Shelf*
- *S2-C5 - Shelf*
- *S3-C5 - Shelf*

Storage Options

- *ST1-C5 - Small Basket*
- *ST2-C5 - Large Basket*
- *ST3-C5 - Storage Bin*

More accessories information see 44-45 page

GIR-2

Tablet Mount Giraffe Cart

GIR4-2

The Column height is 996mm and the Tablet mount 9''-13'' or 13"-15".

B1 616mm diameter Base and optional 100 wheel.

Max load capacity 36 kg / 79 lbs.

Scan or Click

GIR5-2

The Column height is 996mm and the Tablet mount 9''-13'' or 13"-15".

B5 697mm diameter Base and optional 100 or 125 mm wheel.

Max load capacity 40 kg / 88 lbs.

Scan or Click

GIR6-2

The Column height is 996mm and the Tablet mount 9''-13'' or 13"-15".

B3 746mm diameter Base and optional 100 or 125 mm wheel.

Max load capacity 65 kg / 143 lbs.

Scan or Click

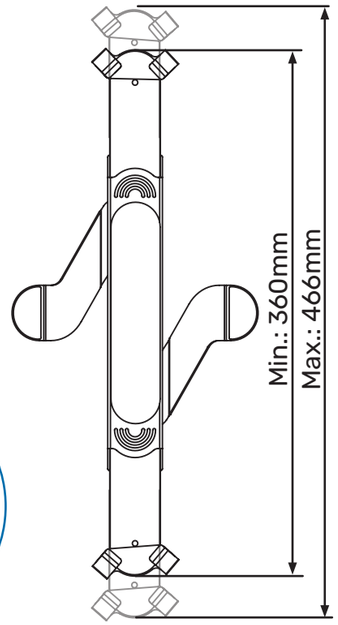

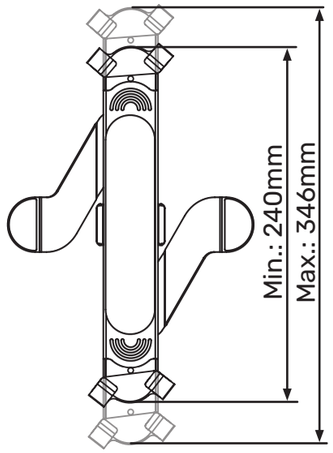

All pictures shown are for illustration purpose only.

Click and Scan

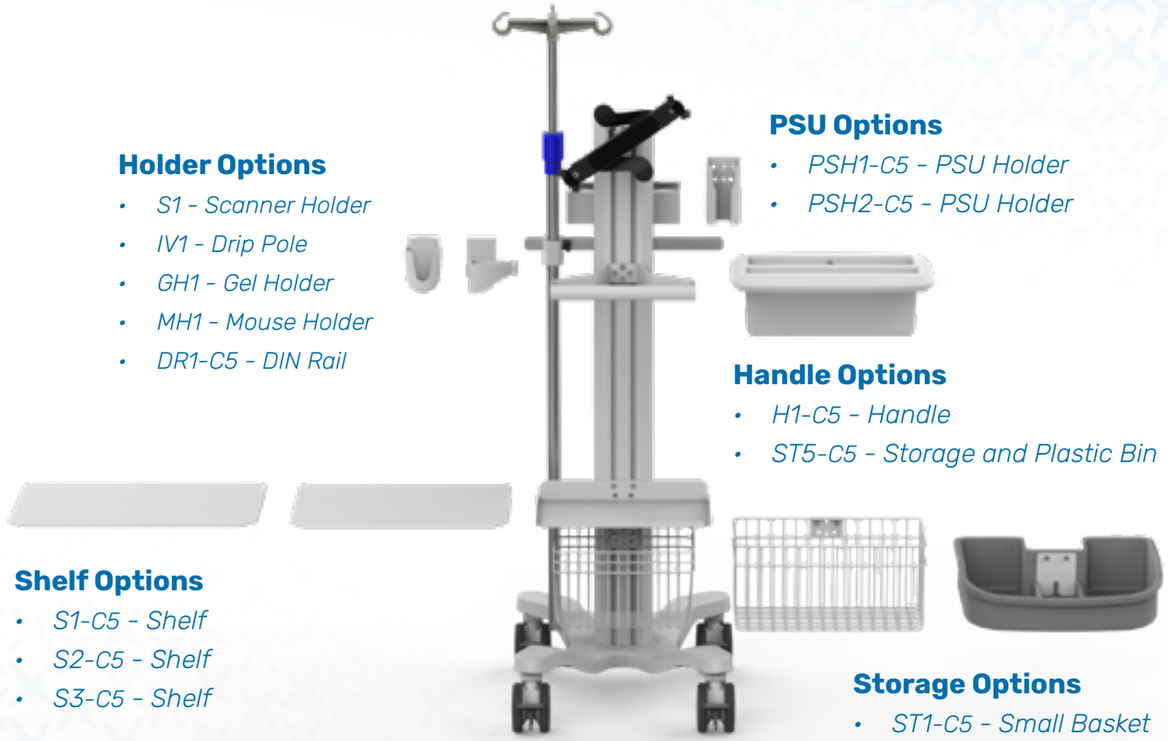

Holder Options

- *S1 - Scanner Holder*
- *IV1 - Drip Pole*
- *GH1 - Gel Holder*
- *MH1 - Mouse Holder*
- *DR1-C5 - DIN Rail*

PSU Options

- *PSH1-C5 - PSU Holder*
- *PSH2-C5 - PSU Holder*

Handle Options

- *H1-C5 - Handle*
- *ST5-C5 - Storage and Plastic Bin*

Shelf Options

- *S1-C5 - Shelf*
- *S2-C5 - Shelf*
- *S3-C5 - Shelf*

Storage Options

- *ST1-C5 - Small Basket*
- *ST2-C5 - Large Basket*
- *ST3-C5 - Storage Bin*

More accessories information see 44-45 page

GIR-6

Quick Release Mount Giraffe Cart

GIR4-6

The Column height is 996mm.

B1 616mm diameter Base and optional 100 wheel.

Max load capacity 36 kg / 79 lbs.

Scan or Click

GIR5-6

The Column height is 996mm.

B5 697mm diameter Base and optional 100 or 125 mm wheel.

Max load capacity 40 kg / 88 lbs.

Scan or Click

GIR6-6

The Column height is 996mm.

B3 746mm diameter Base and optional 100 or 125 mm wheel.

Max load capacity 65 kg / 143 lbs.

Scan or Click

GIR7-6

The Column height is 996mm.

B4 830mm diameter Base and optioal 100 or 125 mm wheel.

Max load capacity 85 kg / 187 lbs.

Scan or Click

All pictures shown are for illustration purpose only.

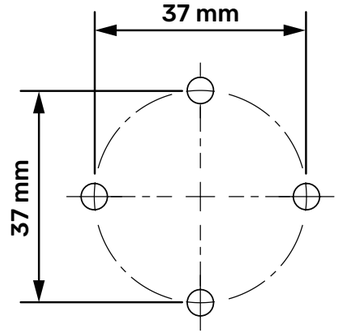

Click and Scan

Holder Options

- *S1 - Scanner Holder*
- *IV1 - Drip Pole*
- *GH1 - Gel Holder*
- *MH1 - Mouse Holder*
- *DR1-C5 - DIN Rail*

Plate Options

- *QRA2 - Quick Release Plate*
- *QRA3 - Quick Release Plate*

PSU Options

- *PSH1-C5 - PSU Holder*
- *PSH2-C5 - PSU Holder*

CPU Options

- *CPU1-C5 - Small CPU Holder*
- *CPU2-C5 - Medium CPU Holder*

Handle Options

- *H1-C5 - Handle*
- *ST5-C5 - Storage and Plastic Bin*

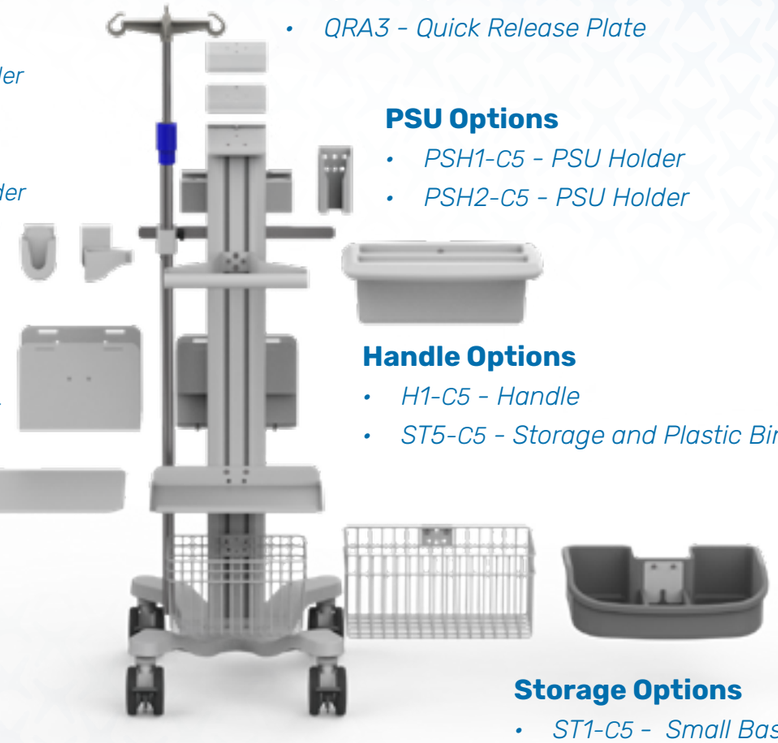

Shelf Options

- *S1-C5 - Shelf*
- *S2-C5 - Shelf*
- *S3-C5 - Shelf*

Storage Options

- *ST1-C5 - Small Basket*
- *ST2-C5 - Large Basket*
- *ST3-C5 - Storage Bin*

More accessories information see 44-45 page

GIR6-V0

Ventillator Cart

Scan or Click

CART DATA

- ***The Column height is 830mm.***
- ***B6 616 diameter Base and optional 100 or 125mm wheel.***
- ***Max load capacity 65 kg / 143 lbs.***

All pictures shown are for illustration purpose only.

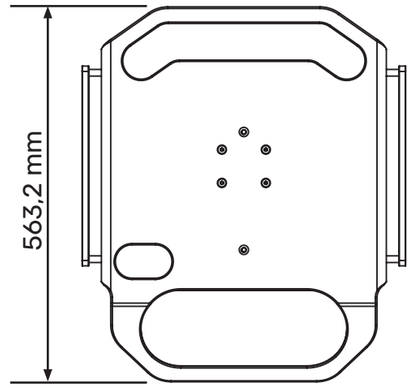

Click and Scan

Holder Options

- *SH1 - Scanner Holder*
- *IV1 - Drip Pole*
- *GH1 - Gel Holder 1*
- *GH2 - Gel Holder 2*
- *DR1-C5 - DIN Rail*

Gas Bottle Options

- ***Single and double gas bottle options***

Storage Options

- *ST1-C5 - Small Basket*
- *ST2-C5 - Large Basket*
- *ST3-C5 - Storage Bin*

More accessories information see 44-45 page

GIR7-6-G

Twin Gas Bottle Cart

Scan or Click

CART DATA

- ***The Column height is 996mm and Suitable for holding 2 x 10L gas bottles***
- ***B4 830mm diameter Base and 125 mm wheel.***
- ***Max load capacity 85 kg / 187 lbs.***

All pictures shown are for illustration purpose only.

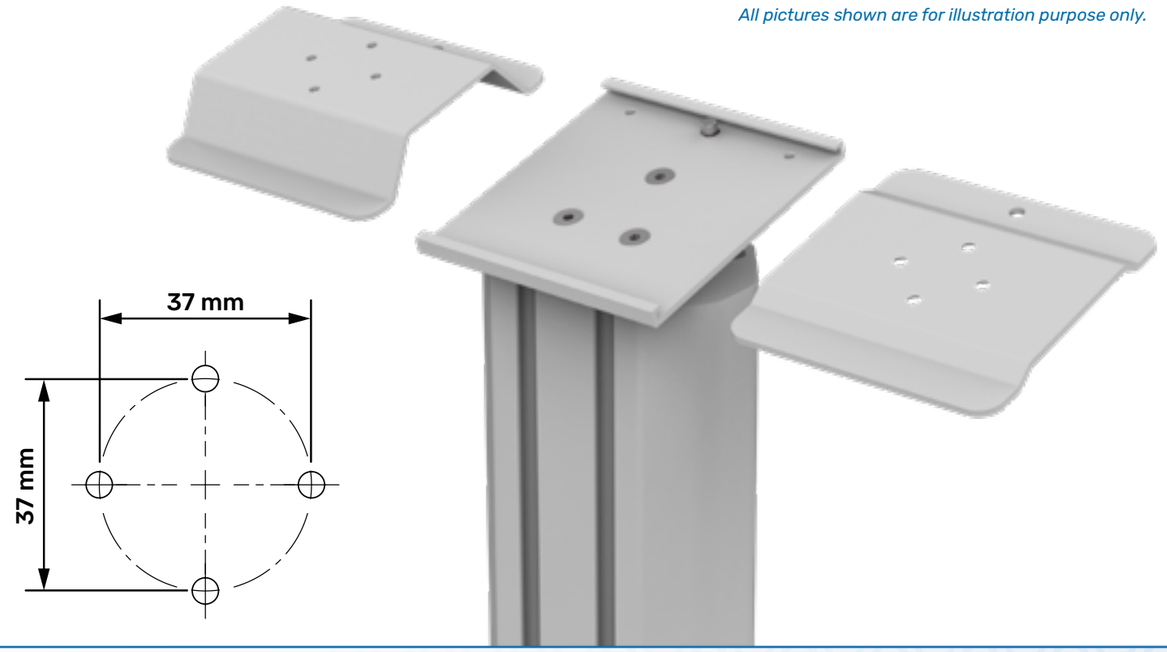

Click and Scan

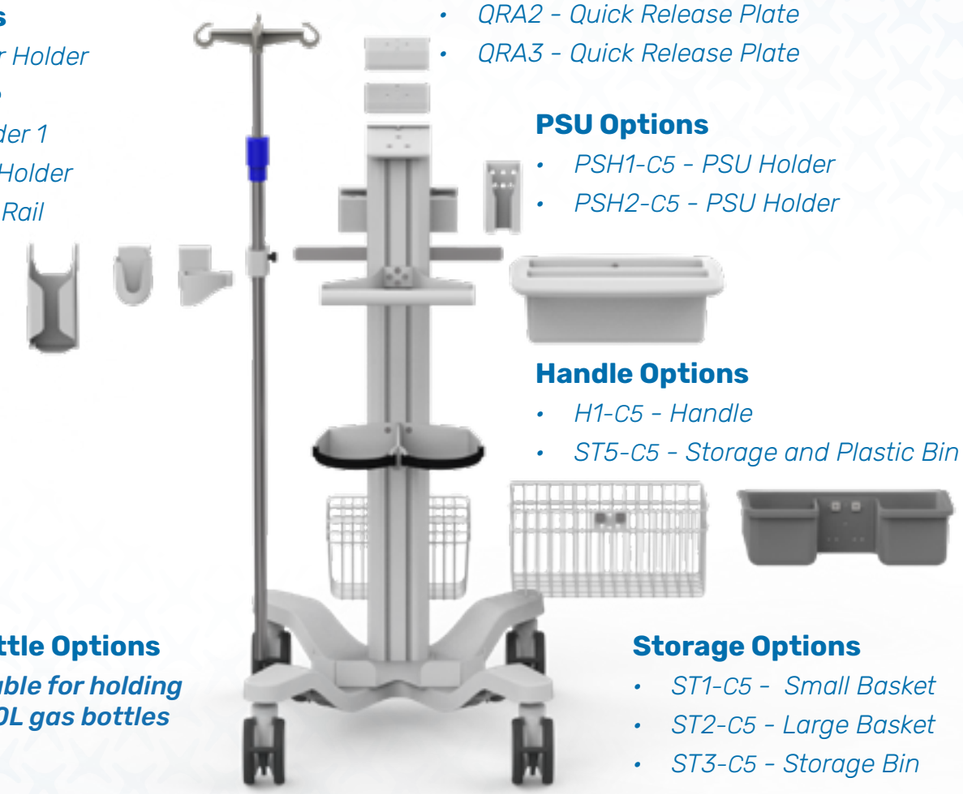

Holder Options

- *SH1 - Scanner Holder*
- *IV1 - Drip Pole*
- *GH1 - Gel Holder 1*
- *MH1 - Mouse Holder*
- *DR1-C5 - DIN Rail*

Plate Options

- *QRA2 - Quick Release Plate*
- *QRA3 - Quick Release Plate*

PSU Options

- *PSH1-C5 - PSU Holder*
- *PSH2-C5 - PSU Holder*

Handle Options

- *H1-C5 - Handle*
- *ST5-C5 - Storage and Plastic Bin*

Gas Bottle Options

- ***Suitable for holding 2 x 10L gas bottles***

Storage Options

- *ST1-C5 - Small Basket*
- *ST2-C5 - Large Basket*
- *ST3-C5 - Storage Bin*

More accessories information see 44-45 page

GIR7-AVO

AV Cart

Scan or Click

All pictures shown are for illustration purpose only.

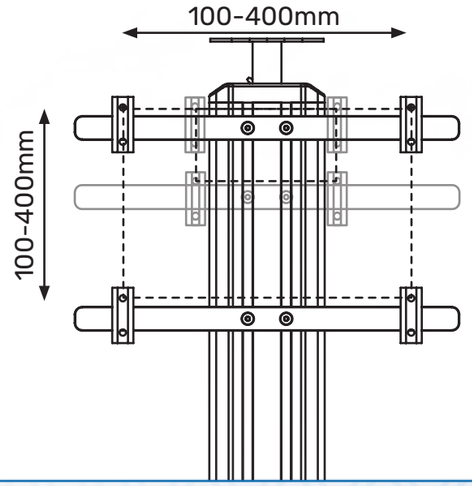

Click and Scan

Camera Mount

Holder Options

- *MH1 - Mouse Holder*

Shelf Options

- *S1-C5 - Small Shelf*

CART DATA

- ***The Column height is 1700mm and easy adjustability vesa mount to any display size upto 65"***
- ***B4 830mm diameter Base and 125 mm wheel.***
- ***Max load capacity 85 kg / 187 lbs.***

More accessories information see 44-45 page

Giraffe range accessories

Qucik Rlease Plate options

Quick Release Plate BM
QRA1-C5

Quick Release Plate
QRA2-C5

CPU Mount options

CPU Mount Small
CPU1-C5

CPU Mount Medium
CPU2-C5

Holder options

Mouse Holder
MH1

Scanner Holder 1
SH1

Scanner Holder 2
SH2

Gel Holder 1
GH1

Gel Holder 2
GH2

Gel Holder 3
GH3

Cable Hook
CH1-C5

Rubber Scanner Holder
SR1

Rubber Scanner Holder
SR2

Storage options

Small Basket
ST1-C5

Large Basket
ST2-C5

Storage Bin
ST3-C5

Handle and Storage
ST5-C5

Drip Pole Clamp and Drip Pole options

Drip Pole Clamp 12,7mm
DRC1

Drip Pole Clamp 25mm
DRC2

Drip Pole
IV1

Gas bottle Holders options

1 Gas bottle Holder
1-0166

2 Gas bottle Holder
1-0268

DIN Rail options

Din Rail 400x10x25mm
DR3-C5

Din Rail 500x10x25mm
DR4-C5

PSU Holder options

PSU Holder 1
PSH1-C5

PSU Holder 2
PSH2-C5

PSU Holder 4
PSH4-C5

PSU Holder 5
PSH5-C5

PSU Holder 7
PSH7-C5

Shelf options

Shelf 1
S1-C5

Shelf 2
S2-C5

Shelf 3
S3-C5

Handle options

Handle
H1-C5

Wrok top options

Work Surface
WS2

Work Surface
WS14

Work Surface
1-0320

Work Surface
1-0497

Component options

Base
B1

Base
B3

Anti-static 100 mm Wheel
GJM3-100-2-W6

Base
B4

Base
B5

Anti-static 100 mm Wheel
GJM3-125-2-W7

995 mm column
C5-L4

1090 mm column
C5-L5

1500 mm column
C5-L6

CHAMELEON
RANGE

CUSTOM COLOR

Optional mounting. (Tablet Mount, Display Mount, Laptop Mount)

Column height adjustable between 774 and 1137 mm

Column can be fitted with a wide range of accessories.

36 kg maximum load capacity base.

Optional 100 or 125 mm diameter antistatic wheels.

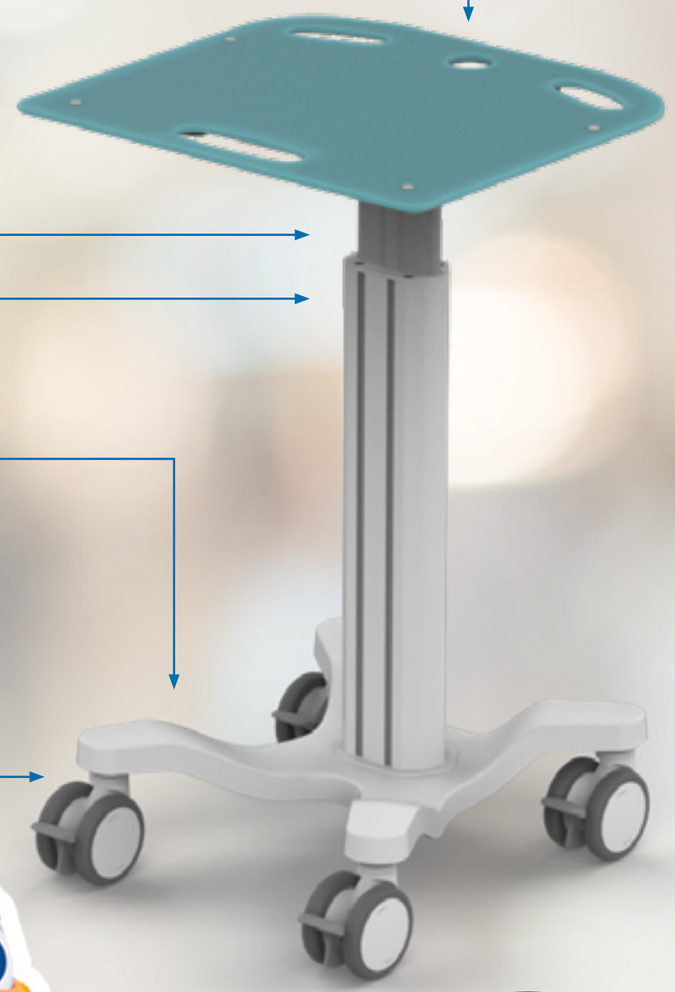

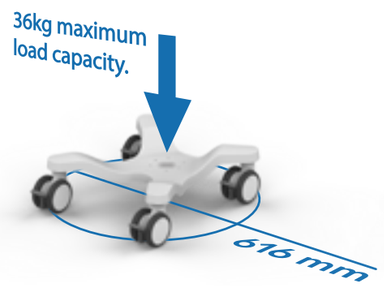

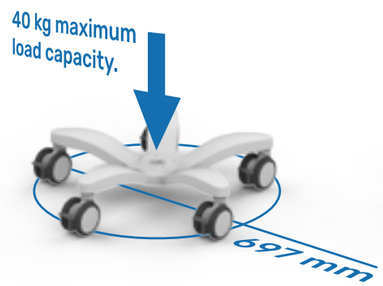

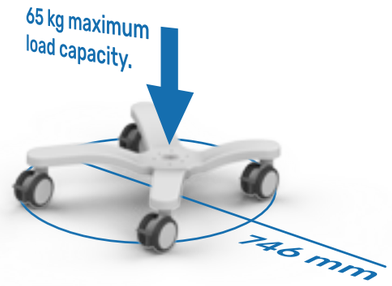

MOUNT OPTIONS

Display Mount
DM1

Tablet Mount
TM2

Laptop Mount
LM4

WORK SURFACE OPTIONS

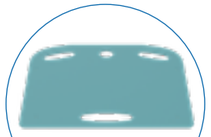

WS6

WS9

WS12

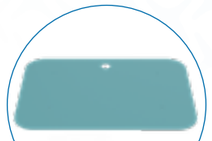

WS

COLUMN OPTIONS

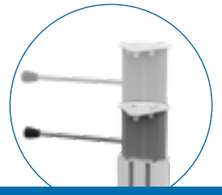

Min.: 774 mm - Max.: 1137 mm

BASE AND WHEEL OPTIONS

CHA-4
B1

ϴ 100 mm

CHA-5
B5

ϴ 100 or 125 mm

CHA-6
B3

ϴ 100 or 125 mm

CHA-4-0

BASIC

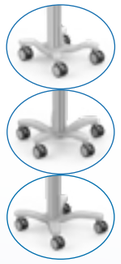

CHA4-0

CHA5-0

CHA6-0

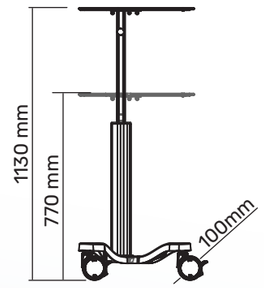

See 50-51 page

CHA-4-1

DISPLAY MOUNT

75 and 100 mm
hole pattern

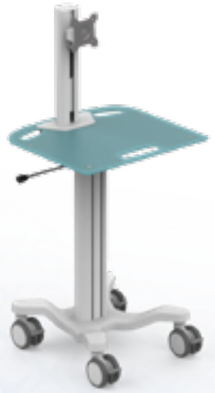

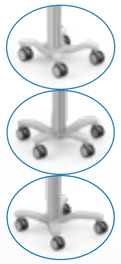

CHA4-1

CHA5-1

CHA6-1

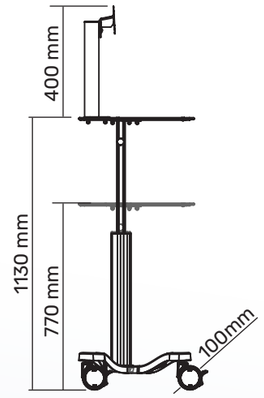

See 52-53 page

CHA-4-2

TABLET MOUNT

9-13' or 13-15'

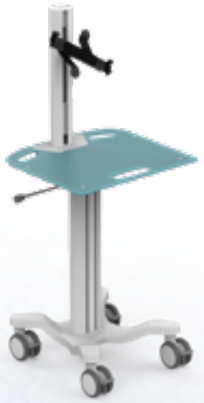

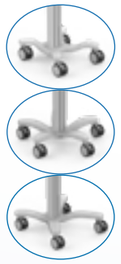

CHA4-2

CHA5-2

CHA6-2

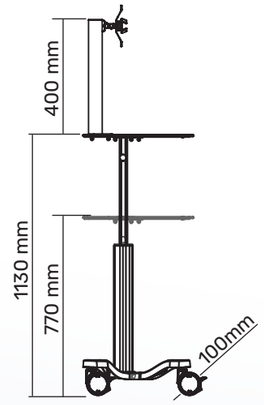

See 54-55 page

CHA-4-3

LAPTOP MOUNT

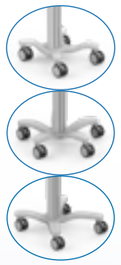

CHA4-3

CHA5-3

CHA6-3

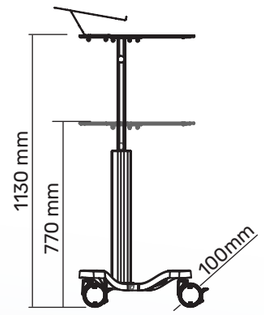

See 56-57 page

CHA-4-4

DISPLAY MOUNT AND KEYOARD TRAY

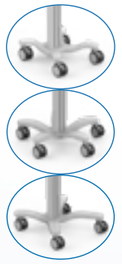

CHA4-4

CHA5-4

CHA6-4

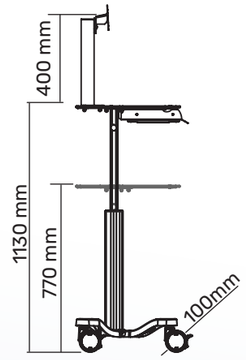

See 58-59 page

CHA-4-5

LAPTOP MOUNT AND KEYBOARD TRAY

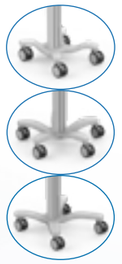

CHA4-5

CHA5-5

CHA6-5

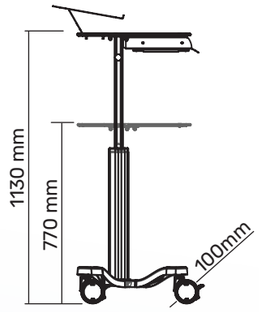

See 60-61 page

CHA-4-0-WS12

ULTRASOUND

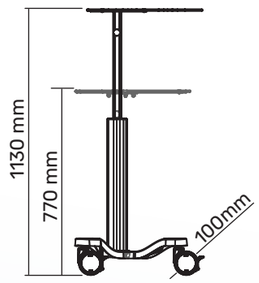

See 62-63 page

CHA-4-8

EDUCATION

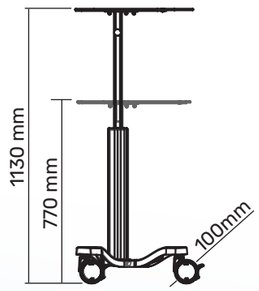

See 64-65 page

CHA-0

Basic Chameleon Cart

CHA4-0

The cart height is 775 mm to 1135 mm (adjustable column height)

B1 616mm diameter Base and optional 100 mm wheel.

Max load capacity 36 kg / 79 lbs.

Scan or Click

CHA5-0

The cart height is 775 mm to 1135 mm (adjustable column height)

B5 697mm diameter Base and optional 100 or 125 mm wheel.

Max load capacity 40 kg / 88 lbs.

Scan or Click

CHA6-0

The cart height is 775 mm to 1135 mm (adjustable column height)

B3 746mm diameter Base and optional 100 or 125 mm wheel.

Max load capacity 65 kg / 143 lbs.

Scan or Click

All pictures shown are for illustration purpose only.

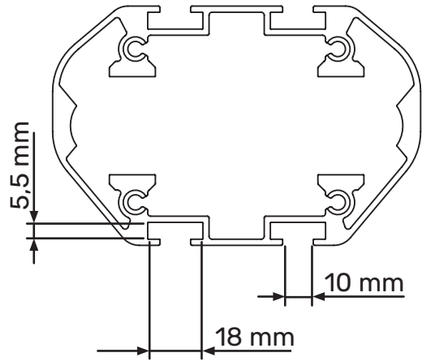

Click and Scan

Holder Options

- *DR1 - DIN Rail*
- *IV1 - Drip Pole*
- *SH1 - Scanner Holder*
- *MH1 - Mouse Holder*
- *GH1 - Gel Holder*

Shelf Options

- *S1-C5 - Shelf*
- *S2-C5 - Shelf*
- *S3-C5 - Shelf*

PSU Options

- *PSH1-C5 - PSU Holder*

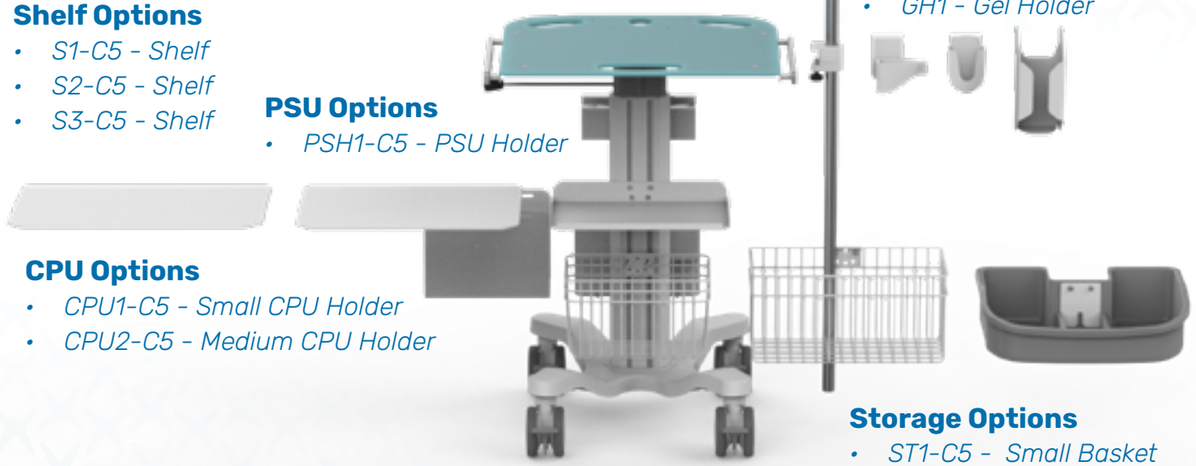

CPU Options

- *CPU1-C5 - Small CPU Holder*
- *CPU2-C5 - Medium CPU Holder*

Storage Options

- *ST1-C5 - Small Basket*
- *ST2-C5 - Large Basket*
- *ST3-C5 - Storage Bin*

More accessories information see 66-67 page

CHA-1

Display Mount Chameleon Cart

CHA4-1

The cart height is 775 mm to 1135 mm (adjustable column height) and 75/100 mm display mount.

B1 616mm diameter Base and optional 100 mm wheel.

Max load capacity 36 kg / 79 lbs.

Scan or Click

CHA5-1

The cart height is 775 mm to 1135 mm (adjustable column height) and 75/100 mm display mount.

B5 697mm diameter Base and optional 100 or 125 mm wheel.

Max load capacity 40 kg / 88 lbs.

Scan or Click

CHA6-1

The cart height is 775 mm to 1135 mm (adjustable column height) and 75/100 mm display mount.

B3 746mm diameter Base and optional 100 or 125 mm wheel.

Max load capacity 65 kg / 143 lbs.

Scan or Click

All pictures shown are for illustration purpose only.

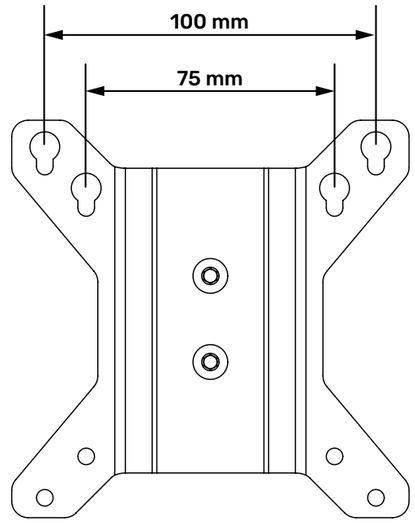

Click and Scan

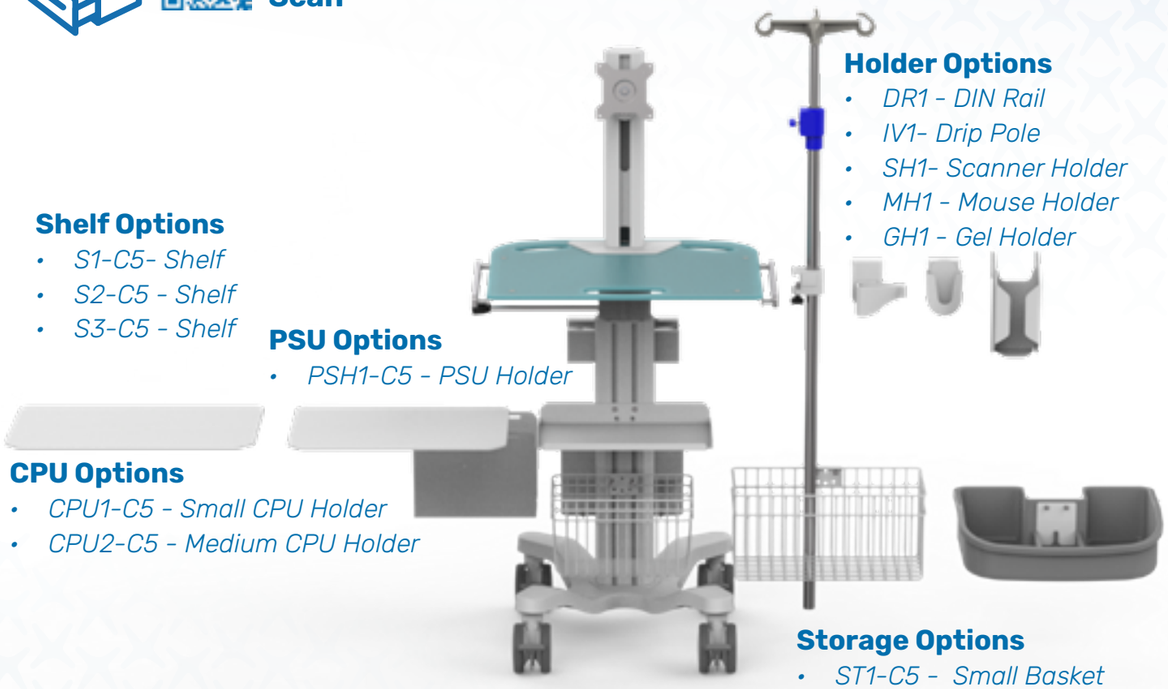

Holder Options

- *DR1 - DIN Rail*
- *IV1- Drip Pole*
- *SH1- Scanner Holder*
- *MH1 - Mouse Holder*
- *GH1 - Gel Holder*

Shelf Options

- *S1-C5- Shelf*
- *S2-C5 - Shelf*
- *S3-C5 - Shelf*

PSU Options

- *PSH1-C5 - PSU Holder*

CPU Options

- *CPU1-C5 - Small CPU Holder*
- *CPU2-C5 - Medium CPU Holder*

Storage Options

- *ST1-C5 - Small Basket*
- *ST2-C5 - Large Basket*
- *ST3-C5 - Storage Bin*

More accessories information see 66-67 page

CHA-2

Tablet Mount Chameleon Cart

CHA4-2

The cart height is 775 mm to 1135 mm (adjustable column height) and Tablet mount 9''-13'' or 13"-15".

B1 616mm diameter Base and optional 100 mm wheel.

Max load capacity 36 kg / 79 lbs.

Scan or Click

CHA5-2

The cart height is 775 mm to 1135 mm (adjustable column height) and Tablet mount 9''-13'' or 13"-15".

B5 697mm diameter Base and optional 100 or 125 mm wheel.

Max load capacity 40 kg / 88 lbs.

Scan or Click

CHA6-2

The cart height is 775 mm to 1135 mm (adjustable column height) and Tablet mount 9''-13'' or 13"-15".

B3 746mm diameter Base and optional 100 or 125 mm wheel.

Max load capacity 65 kg / 143 lbs.

Scan or Click

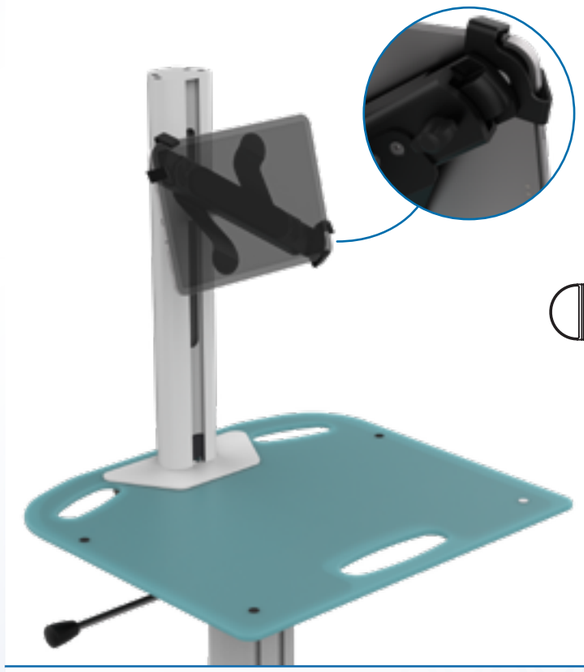

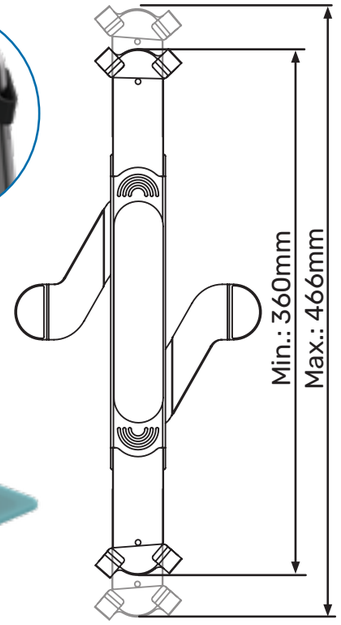

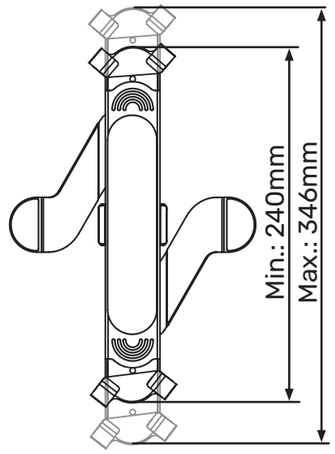

All pictures shown are for illustration purpose only.

Click and Scan

Tablet Mount Options

- *TM2-13 - Tablet Mount 13''*
- *TM2-15 - Tablet Mount 15''*

Holder Options

- *DR1 - DIN Rail*
- *SH1 - Scanner Holder*
- *MH1 - Mouse Holder*
- *GH1 - Gel Holder*

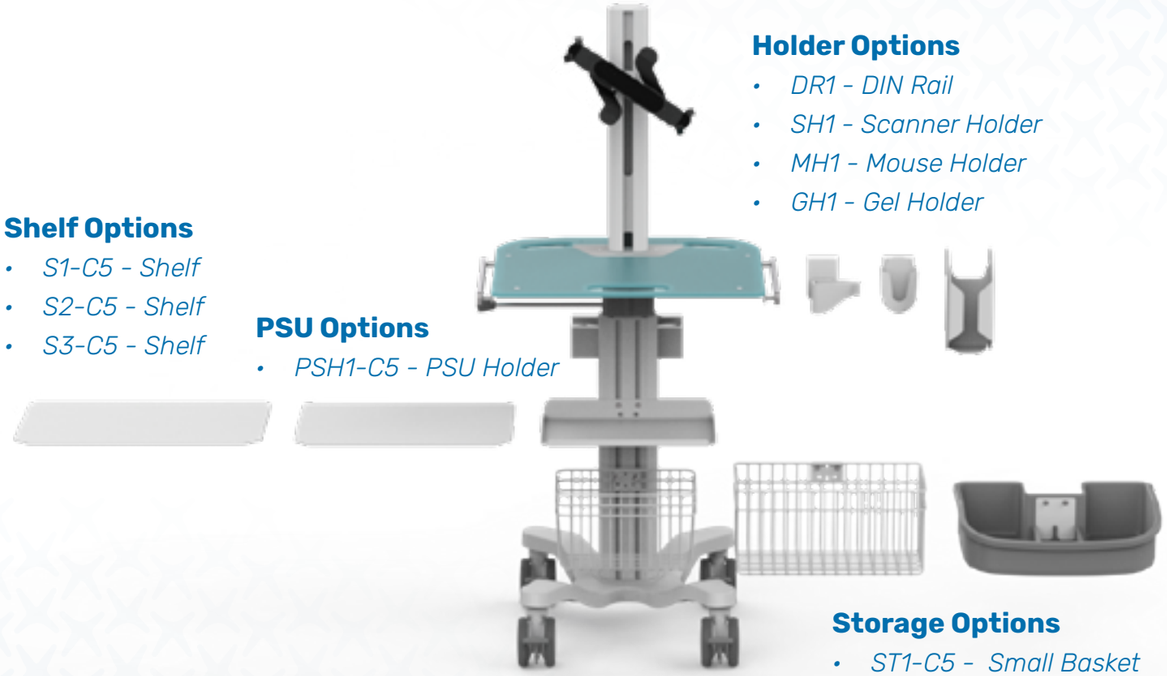

Shelf Options

- *S1-C5 - Shelf*
- *S2-C5 - Shelf*
- *S3-C5 - Shelf*

PSU Options

- *PSH1-C5 - PSU Holder*

Storage Options

- *ST1-C5 - Small Basket*
- *ST2-C5 - Large Basket*
- *ST3-C5 - Storage Bin*

More accessories information see 66-67 page

CHA-3

Laptop Mount Chameleon Cart

CHA4-3

The cart height is 775 mm to 1135 mm (adjustable column height) and 13''-17'' Laptop mount.

B1 616mm diameter Base and optional 100 mm wheel.

Max load capacity 36 kg / 79 lbs.

Scan or Click

CHA5-3

The cart height is 775 mm to 1135 mm (adjustable column height) and 13''-17'' Laptop mount.

B5 697mm diameter Base and optional 100 or 125 mm wheel.

Max load capacity 40 kg / 88 lbs.

Scan or Click

CHA6-3

The cart height is 775 mm to 1135 mm (adjustable column height) and 13''-17'' Laptop mount.

B3 746mm diameter Base and optional 100 or 125 mm wheel.

Max load capacity 65 kg / 143 lbs.

Scan or Click

All pictures shown are for illustration purpose only.

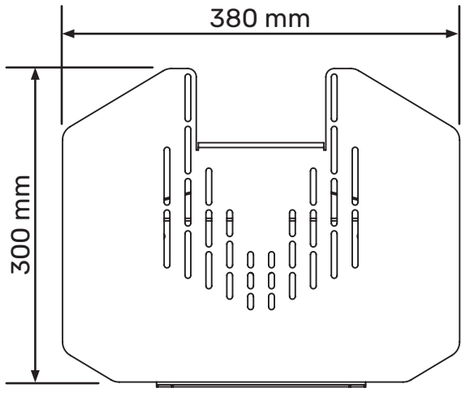

Click and Scan

Protector

- *Laptop Protector*

Holder Options

- *DR1 - DIN Rail*
- *SH1 - Scanner Holder*
- *MH1 - Mouse Holder*
- *GH1 - Gel Holder*

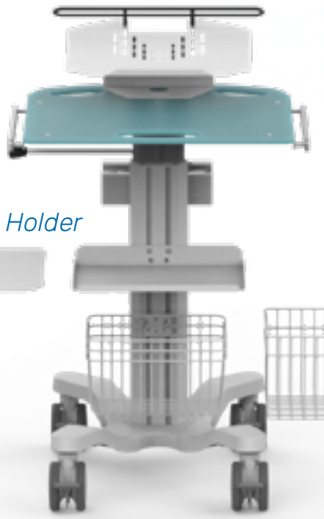

Shelf Options

- *S1-C5 - Shelf*
- *S2-C5 - Shelf*
- *S3-C5 - Shelf*

PSU Options

- *PSH1-C5 - PSU Holder*

CPU Options

- *CPU1-C5 - Small CPU Holder*
- *CPU2-C5 - Medium CPU Holder*

Storage Options

- *ST1-C5 - Small Basket*
- *ST2-C5 - Large Basket*
- *ST3-C5 - Storage Bin*

More accessories information see 66-67 page

CHA-4

Display Mount with Keyboard Tray
Chameleon Cart

CHA4-4

The cart height is 775 mm to 1135 mm (adjustable column height) and 75/100 mm display mount.

B1 616mm diameter Base and optional 100 mm wheel.

Max load capacity 36 kg / 79 lbs.

Scan or Click

CHA5-4

The cart height is 775 mm to 1135 mm (adjustable column height) and 75/100 mm display mount.

B5 697mm diameter Base and optional 100 or 125 mm wheel.

Max load capacity 40 kg / 88 lbs.

Scan or Click

CHA6-4

The cart height is 775 mm to 1135 mm (adjustable column height) and 75/100 mm display mount.

B3 746mm diameter Base and optional 100 or 125 mm wheel.

Max load capacity 65 kg / 143 lbs.

Scan or Click

All pictures shown are for illustration purpose only.

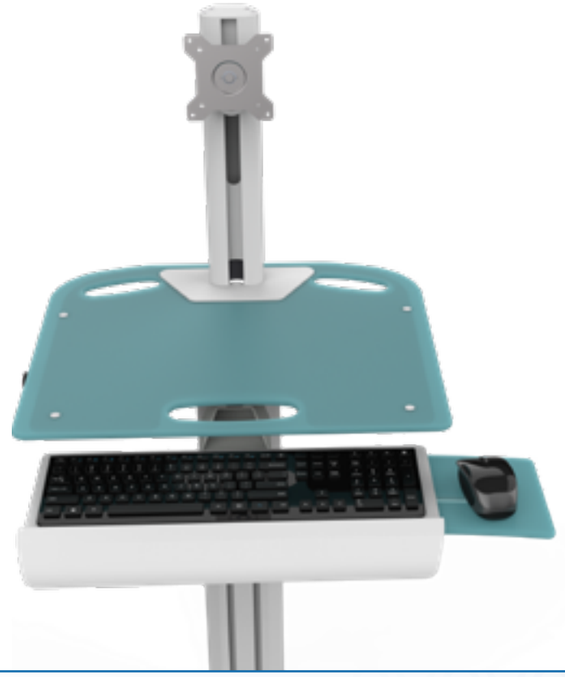

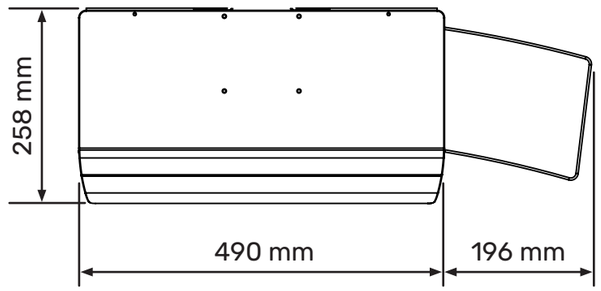

Click and Scan

Display Mount

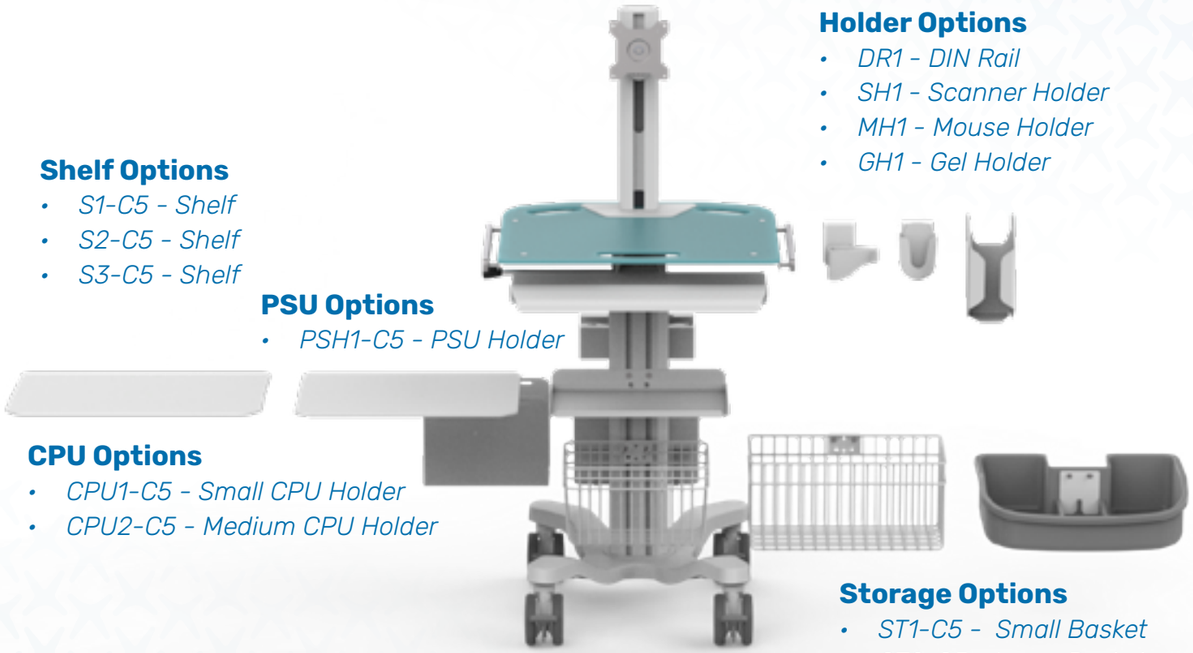

Holder Options
- *DR1 - DIN Rail*
- *SH1 - Scanner Holder*
- *MH1 - Mouse Holder*
- *GH1 - Gel Holder*

Shelf Options
- *S1-C5 - Shelf*
- *S2-C5 - Shelf*
- *S3-C5 - Shelf*

PSU Options
- *PSH1-C5 - PSU Holder*

CPU Options
- *CPU1-C5 - Small CPU Holder*
- *CPU2-C5 - Medium CPU Holder*

Storage Options
- *ST1-C5 - Small Basket*
- *ST2-C5 - Large Basket*
- *ST3-C5 - Storage Bin*

More accessories information see 66-67 page

CHA-5

Laptop Mount with Keyboard Tray Chameleon Cart

CHA4-5

The cart height is 775 mm to 1135 mm (adjustable column height) and 13''-17'' Laptop mount.

B1 616mm diameter Base and optional 100 wheel.

Max load capacity 36 kg / 79 lbs.

Scan or Click

CHA5-5

The cart height is 775 mm to 1135 mm (adjustable column height) and 13''-17'' Laptop mount.

B5 697mm diameter Base and optional 100 or 125 mm wheel.

Max load capacity 40 kg / 88 lbs.

Scan or Click

CHA6-5

The cart height is 775 mm to 1135 mm (adjustable column height) and 13''-17'' Laptop mount.

B3 746mm diameter Base and optional 100 or 125 mm wheel.

Max load capacity 65 kg / 143 lbs.

Scan or Click

All pictures shown are for illustration purpose only.

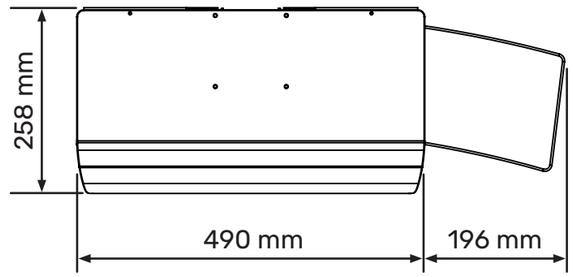

Click and Scan

Protector
- *Laptop Protector*

Holder Options
- *DR1 - DIN Rail*
- *SH1 - Scanner Holder*
- *MH1 - Mouse Holder*
- *GH1 - Gel Holder*

Shelf Options
- *S1-C5 - Shelf*
- *S2-C5 - Shelf*
- *S3-C5 - Shelf*

PSU Options
- *PSH1-C5 - PSU Holder*

CPU Options
- *CPU1-C5 - Small CPU Holder*
- *CPU2-C5 - Medium CPU Holder*

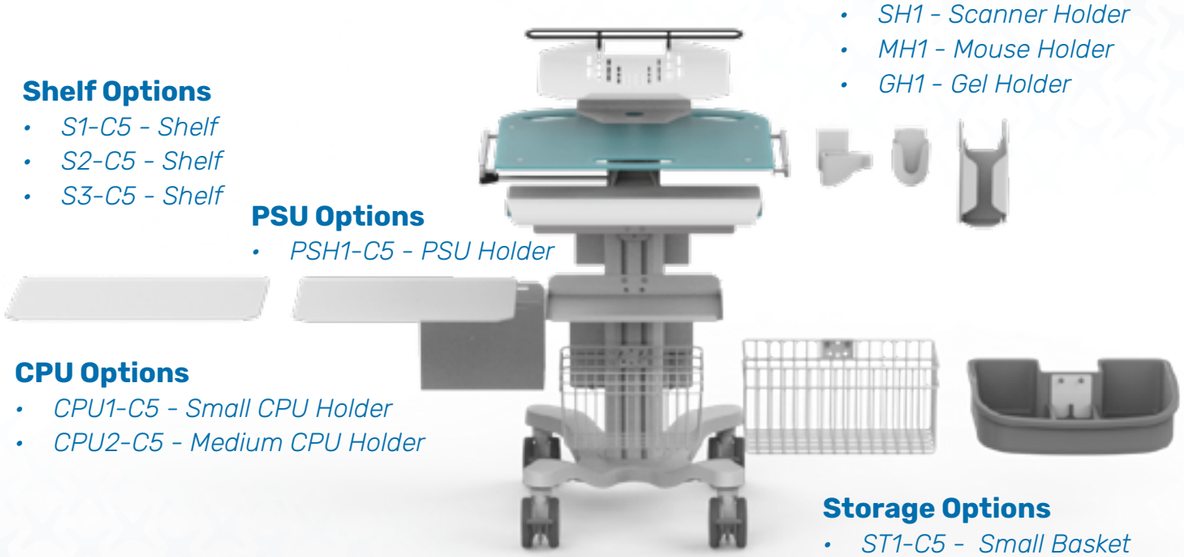

Storage Options
- *ST1-C5 - Small Basket*
- *ST2-C5 - Large Basket*
- *ST3-C5 - Storage Bin*

More accessories information see 66-67 page

CHA-0-WS12

Ultrasound Chameleon Cart

Scan or Click

CART DATA

- ***The cart height is 775 mm to 1135 mm (adjustable column height) and 75/100 mm display mount.***
- ***B1 616mm diameter Base and optional 100 or 125mm wheel.***
- ***Max load capacity 36 kg / 55.12 lbs.***

All pictures shown are for illustration purpose only.

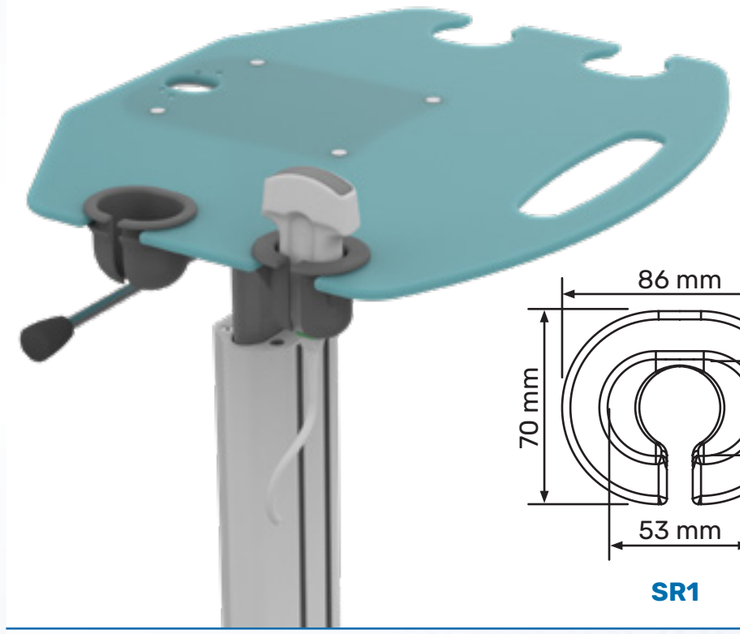

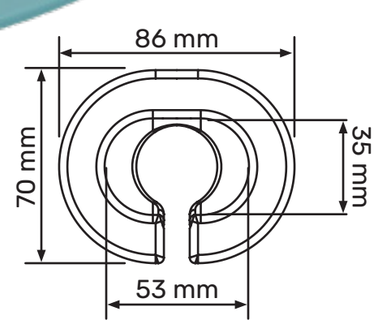

SR1

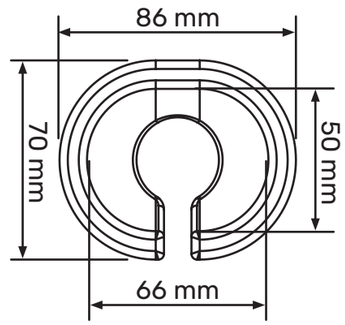

SR2

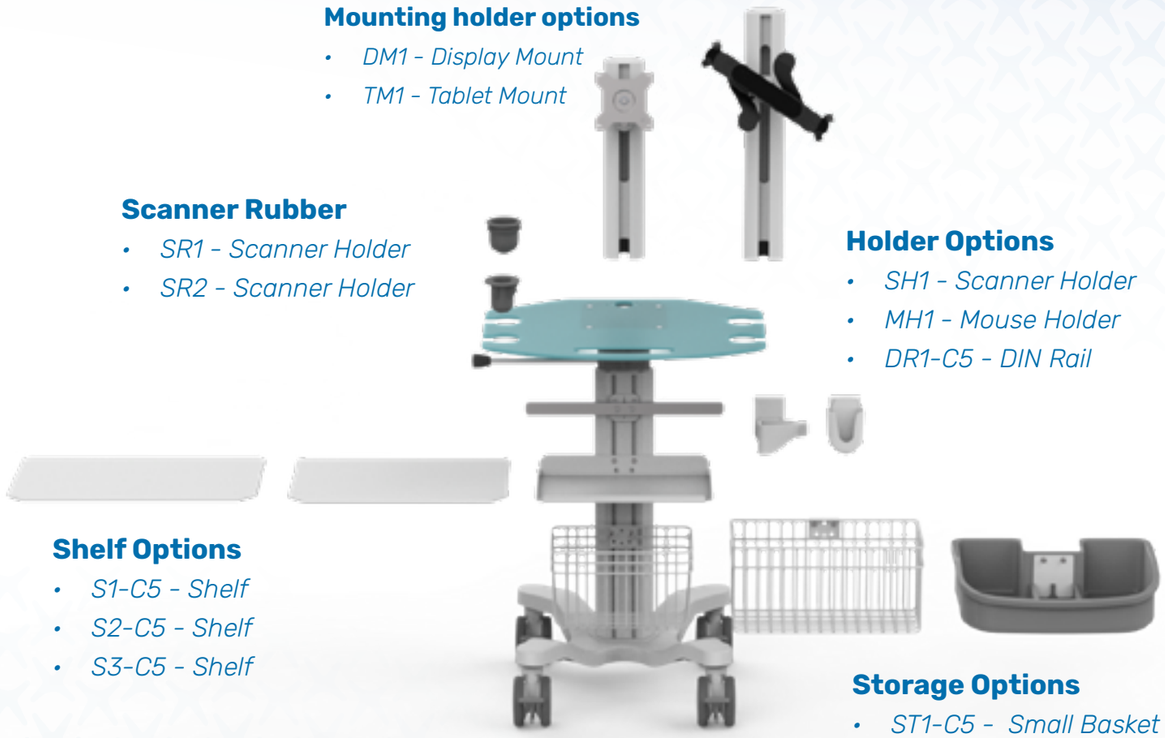

Mounting holder options

- *DM1 - Display Mount*
- *TM1 - Tablet Mount*

Scanner Rubber

- *SR1 - Scanner Holder*
- *SR2 - Scanner Holder*

Holder Options

- *SH1 - Scanner Holder*
- *MH1 - Mouse Holder*
- *DR1-C5 - DIN Rail*

Shelf Options

- *S1-C5 - Shelf*
- *S2-C5 - Shelf*
- *S3-C5 - Shelf*

Storage Options

- *ST1-C5 - Small Basket*
- *ST2-C5 - Large Basket*
- *ST3-C5 - Storage Bin*

More accessories information see 66-67 page

CHA-4-8

Education Chameleon Cart

Scan or Click

CART DATA

- ***The cart height is 775 mm to 1135 mm (adjustable column height)***
- ***B1 616 diametermm Base and optional 100 or 125mm wheel.***
- ***Max load capacity 36 kg / 55.12 lbs.***

All pictures shown are for illustration purpose only.

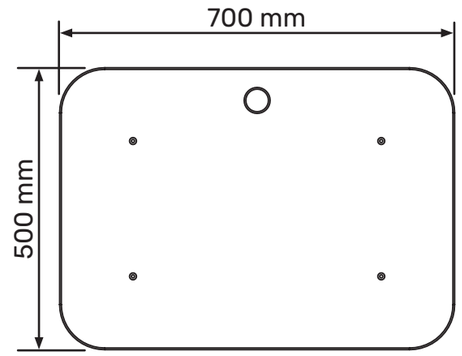

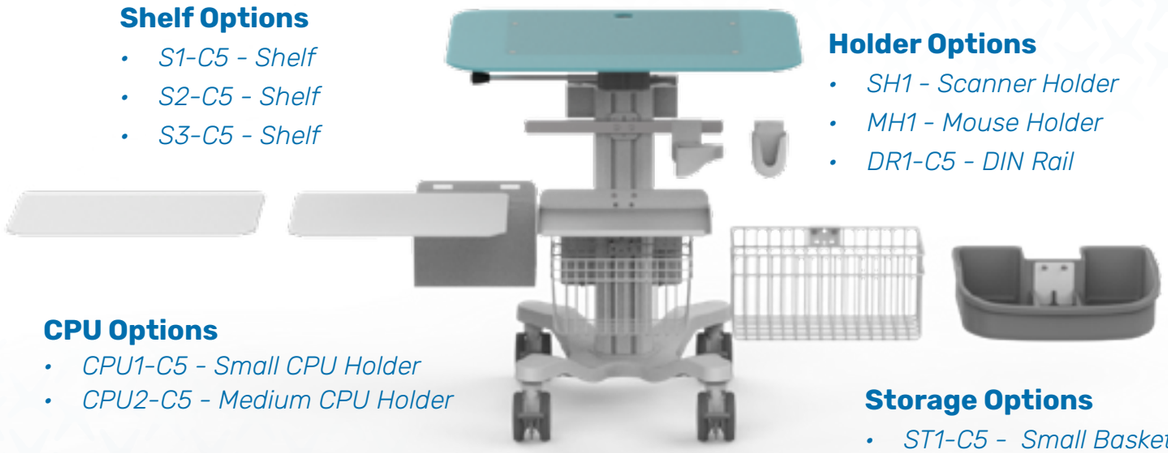

Shelf Options

- *S1-C5 - Shelf*
- *S2-C5 - Shelf*
- *S3-C5 - Shelf*

Holder Options

- *SH1 - Scanner Holder*
- *MH1 - Mouse Holder*
- *DR1-C5 - DIN Rail*

CPU Options

- *CPU1-C5 - Small CPU Holder*
- *CPU2-C5 - Medium CPU Holder*

Storage Options

- *ST1-C5 - Small Basket*
- *ST2-C5 - Large Basket*
- *ST3-C5 - Storage Bin*

More accessories information see 66-67 page

Chameleon range accessories

Mounting options

Display Mount
DM2

Tablet Mount
TM1

Dual Display Mount
DM6

Camera Mount
CM1

Camera Mount
CM2

Twin Screen Mount
TSM1

Laptop Mount
LM1

Keyboard Tray options

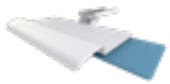
Keyboard Tray 2
KB2

CPU Mount options

CPU Mount Small
CPU1-C5

CPU Mount Medium
CPU2-C5

CPU Mount Big
CPU3-C5

Holder options

Mouse Holder
MH1

Scanner Holder 1
SH1

Scanner Holder 2
SH2

Gel Holder 1
GH1

Gel Holder 2
GH2

Gel Holder 3
GH3

Cable Hook
CH1-C5

Rubber Scanner Holder
SR1

Rubber Scanner Holder
SR2

Storage options

Small Basket
ST1-C5

Large Basket
ST2-C5

Storage Bin
ST3-C5

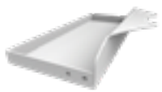
Cable Holder
ST4-C5

Drawer options

Small Drawer
D1

Small Drawer
D2

Large Drawer
D5

Large Drawer
D6

Small + Large Drawer
D8

Drip Pole Clamp and Drip Pole options

Drip Pole Clamp
12,7mm
DRC1

Drip Pole Clamp
25mm
DRC2

Drip Pole
IV1

PSU Holder options

PSU Holder 1
PSH1-C5

PSU Holder 2
PSH2-C5

PSU Holder 4
PSH4-C5

PSU Holder 5
PSH5-C5

PSU Holder 7
PSH7-C5

Shelves options

Shelf 1
S1-C5

Shelf 2
S2-C5

Shelf 3
S3-C5

Shelf 4
S4-C5

Shelf 5
S5-C5

Shelf 6
S6-C5

Shelf 7
S7-C5

Din Rail options

Din Rail Kit
DR1-C5

Din Rail
DR3-C5

Din Rail
DR7-C5

Wrok top options

Work Surface
WS3

Work Surface
WS6

Work Surface
WS8

Work Surface
WS9

Work Surface
WS10

Component options

1090 mm column
C5-L5
110N / 140N / 170N / 200N / 250N / 300N
Gas Spring

Anti-static
100 mm Wheel
GJM3-100-2-W6

Anti-static
125 mm Wheel
GJM3-125-2-W7

RHINO
RANGE

CUSTOM COLOR

Optional mounting. (Tablet Mount, Display Mount, Laptop Mount)

Column height adjustable between 774 and 1137 mm

Column can be fitted with a wide range of accessories.

85 kg maximum load capacity base.

100 mm diameter antistatic wheels.

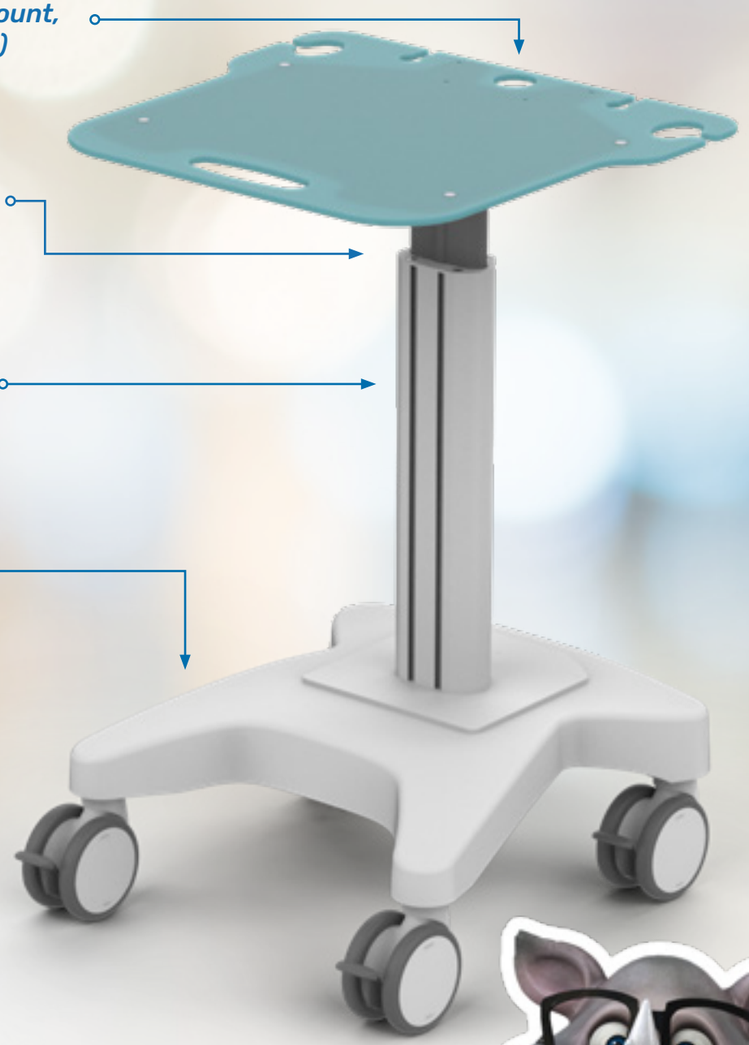

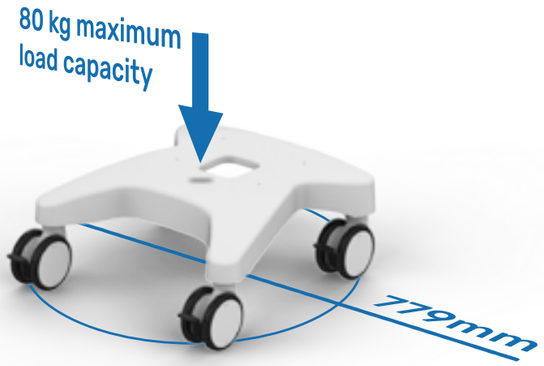

Click

MOUNT OPTIONS

Display Mount DM1

Display Mount DM1

Twin Disp. Mount DM7

Tablet Mount TM2

Laptop Mount LM4

WORK SURFACE OPTIONS

WS9

COLUMN OPTIONS

C5H

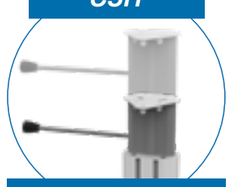

Min.: 660 mm - Max.: 960 mm

C4-L2

Fix. 830mm

BASE AND WHEEL OPTIONS

B6

ϴ 100 or 125 mm

RHI-0

BASIC

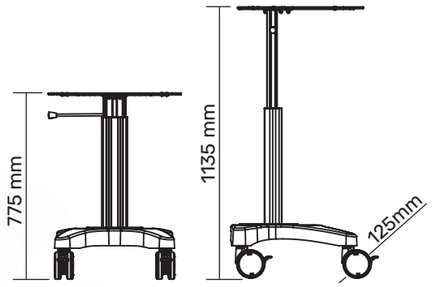

See 72-73 page

RHI-1

DISPLAY MOUNT

75 and 100 mm
hole pattern

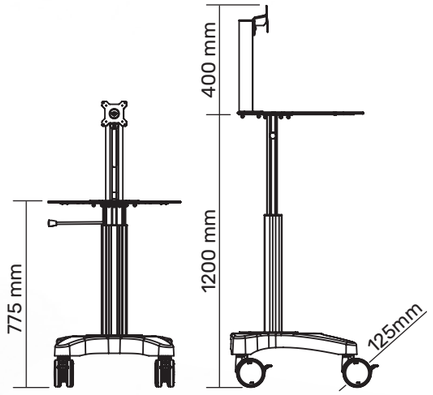

See 74-75 page

RHI-3

LAPTOP MOUNT

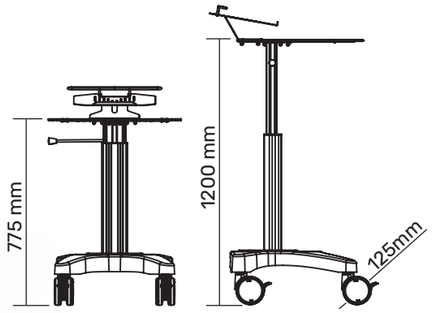

See 76-77 page

RHI-4

DISPLAY MOUNT AND KEYBOARD TRAY

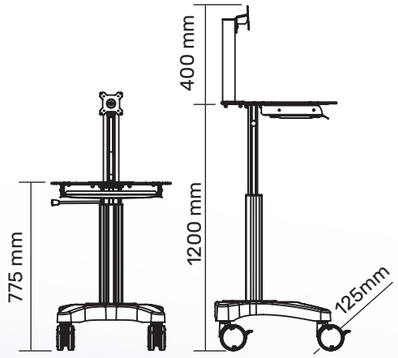

See 78-79 page

RHI-4-P

DISPLAY MOUNT, KEYBOARD TRAY AND POWER PACK

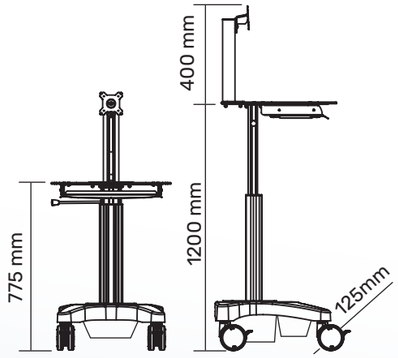

See 80-81 page

RHI-4-E

DISPLAY MOUNT AND KEYOARD TRAY

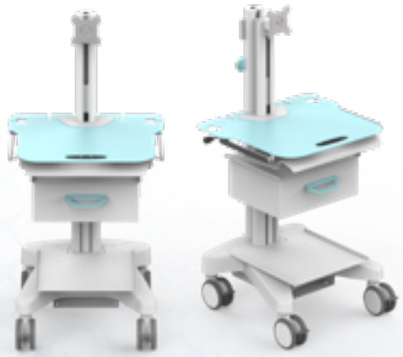

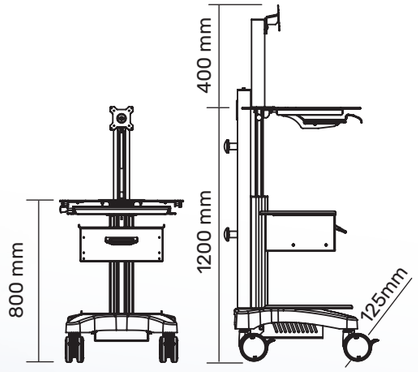

See 82-83 page

RHI-0-N

ULTRASOUND

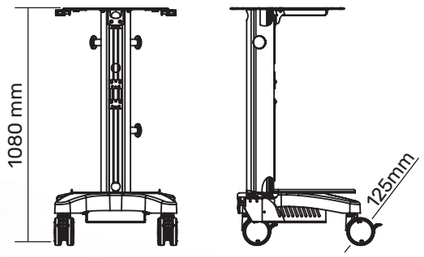

See 84-85 page

RHI-0

Basic Rhino Cart

All pictures shown are for illustration purpose only.

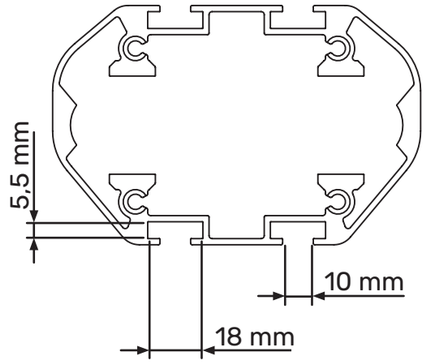

Click and Scan

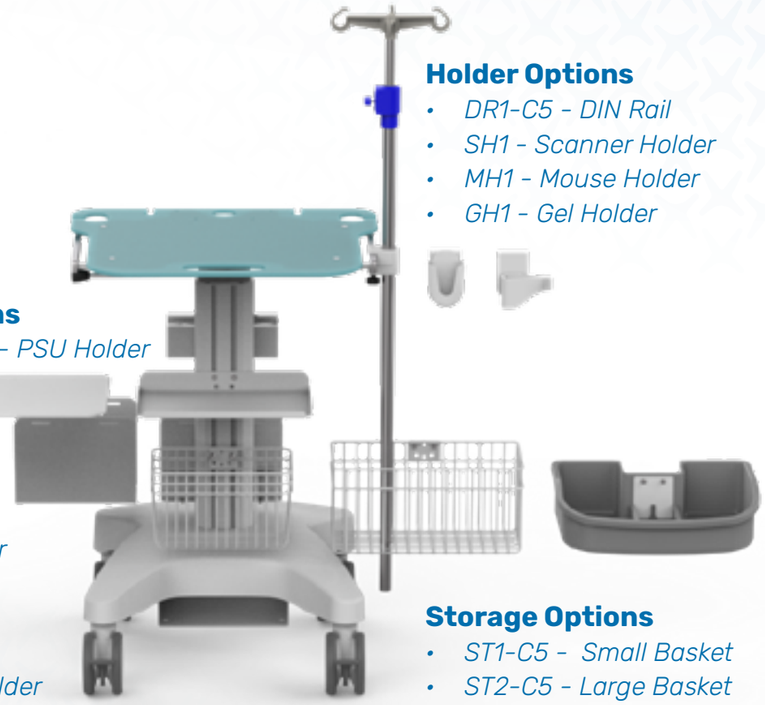

Holder Options
- *DR1-C5 - DIN Rail*
- *SH1 - Scanner Holder*
- *MH1 - Mouse Holder*
- *GH1 - Gel Holder*

Shelf Options
- *S1-C5 - Shelf*
- *S2-C5 - Shelf*
- *S3-C5 - Shelf*

PSU Options
- *PSH1-C5 - PSU Holder*

CPU Options
- *CPU1-C5 - Small CPU Holder*
- *CPU2-C5 - Medium CPU Holder*

Isolation Transformer Holder Option
- *ITH1 - Isolation Transformer Holder*

Storage Options
- *ST1-C5 - Small Basket*
- *ST2-C5 - Large Basket*
- *ST3-C5 - Storage Bin*

CART DATA

- ***The cart height is 775 mm or 1200 mm (adjustable column height)***
- ***616 diameter Base and optional 125mm wheel.***
- ***Max load capacity 80 kg / 176.3 lbs.***

More accessories information see 86-87 page

RHI-1

Display Mount Rhino Cart

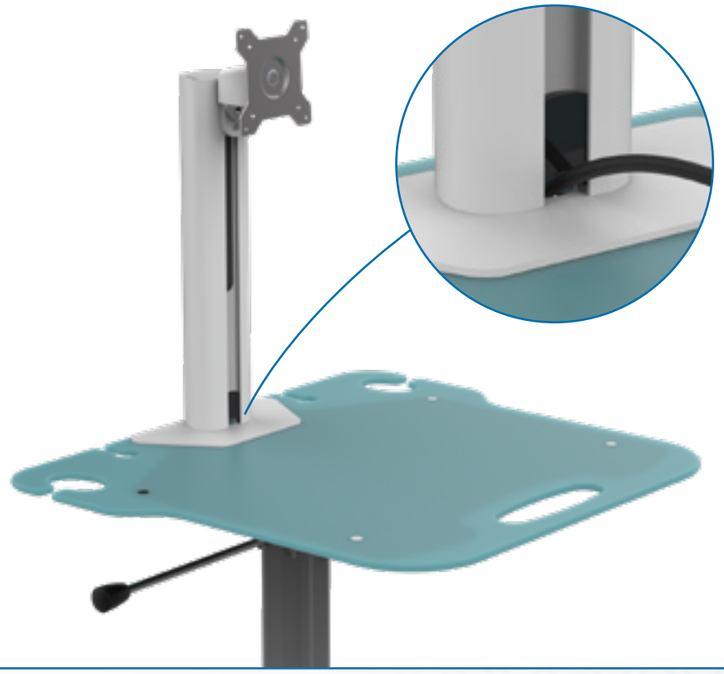

All pictures shown are for illustration purpose only.

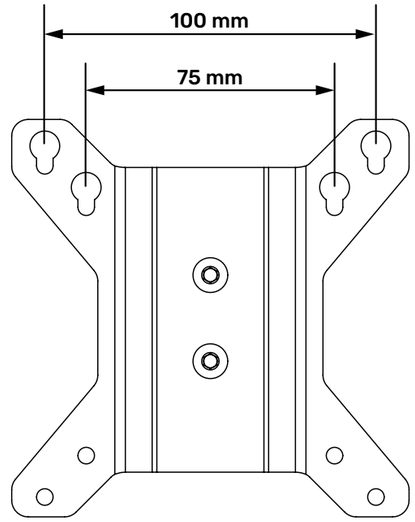

Click and Scan

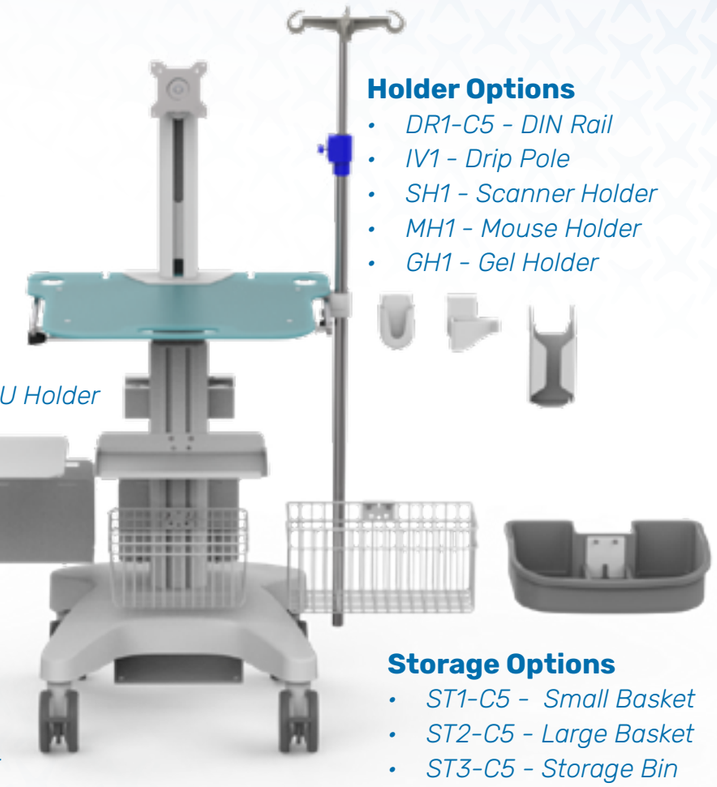

Holder Options

- *DR1-C5 - DIN Rail*
- *IV1 - Drip Pole*
- *SH1 - Scanner Holder*
- *MH1 - Mouse Holder*
- *GH1 - Gel Holder*

Shelf Options

- *S1-C5 - Shelf*
- *S2-C5 - Shelf*
- *S3-C5 - Shelf*

PSU Options

- *PSH1-C5 - PSU Holder*

CPU Options

- *CPU1-C5 - Small CPU Holder*
- *CPU2-C5 - Medium CPU Holder*

Isolation Transformer Holder Option

- *ITH1 - Isolation Transformer Holder*

Storage Options

- *ST1-C5 - Small Basket*
- *ST2-C5 - Large Basket*
- *ST3-C5 - Storage Bin*

CART DATA

- ***The cart height is 775 mm or 1200 mm (adjustable column height) and 75/100 mm display mount.***
- ***616 diameter Base and optional 125mm wheel.***
- ***Max load capacity 80 kg / 176.3 lbs.***

More accessories information see 86-87 page

RHI-3

Laptop Mount Rhino Cart

CART DATA

- ***The cart height is 775 mm or 1200 mm (adjustable column height) and 13''-17'' Laptop mount.***
- ***616 diameter Base and optional 125mm wheel.***
- ***Max load capacity 80 kg / 176.3 lbs.***

All pictures shown are for illustration purpose only.

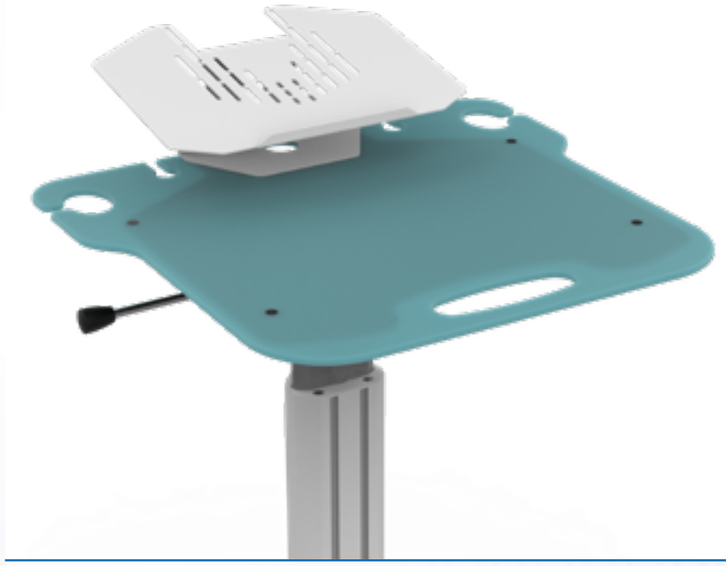

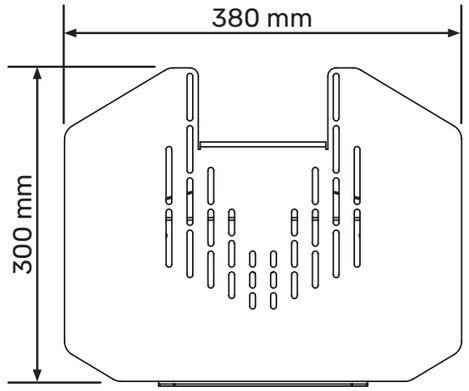

Click and Scan

Protector
- *Laptop Protector*

Holder Options
- *DR1-C5 - DIN Rail*
- *IV1 - Drip Pole*
- *SH1 - Scanner Holder*
- *MH1 - Mouse Holder*
- *GH1 - Gel Holder*

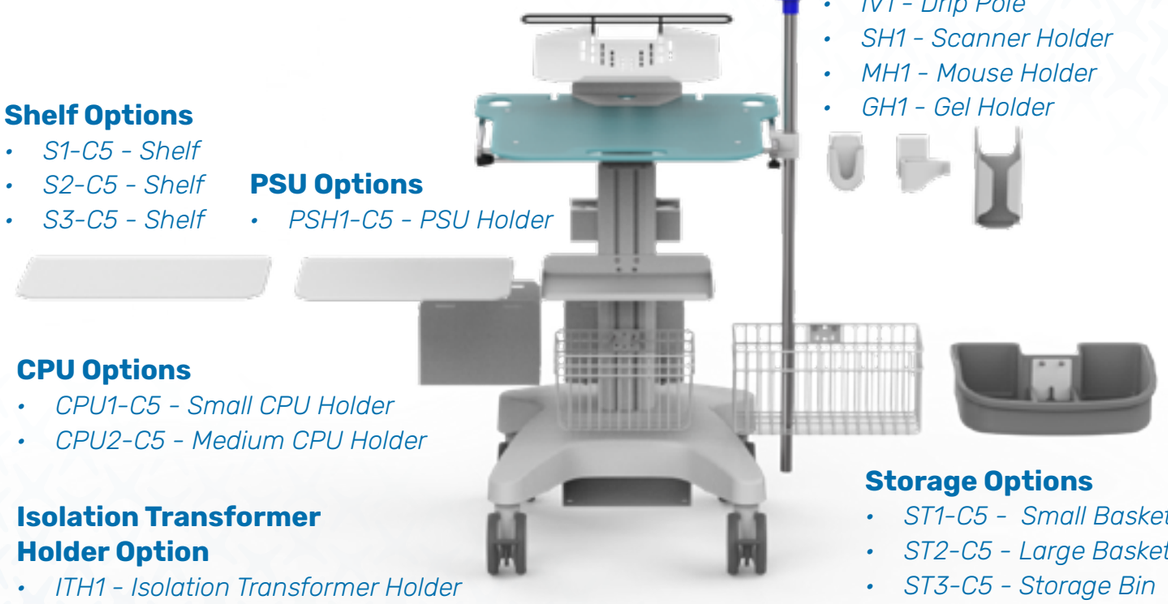

Shelf Options
- *S1-C5 - Shelf*
- *S2-C5 - Shelf*
- *S3-C5 - Shelf*

PSU Options
- *PSH1-C5 - PSU Holder*

CPU Options
- *CPU1-C5 - Small CPU Holder*
- *CPU2-C5 - Medium CPU Holder*

Isolation Transformer Holder Option
- *ITH1 - Isolation Transformer Holder*

Storage Options
- *ST1-C5 - Small Basket*
- *ST2-C5 - Large Basket*
- *ST3-C5 - Storage Bin*

More accessories information see 86-87 page

RHI-4

Display Mount and Keyboard Tray Rhino Cart

CART DATA

- ***The cart height is 775 mm or 1200 mm (adjustable column height) and 75/100 mm display mount.***
- ***616 diameter Base and optional 125mm wheel.***
- ***Max load capacity 80 kg / 176.3 lbs.***

All pictures shown are for illustration purpose only.

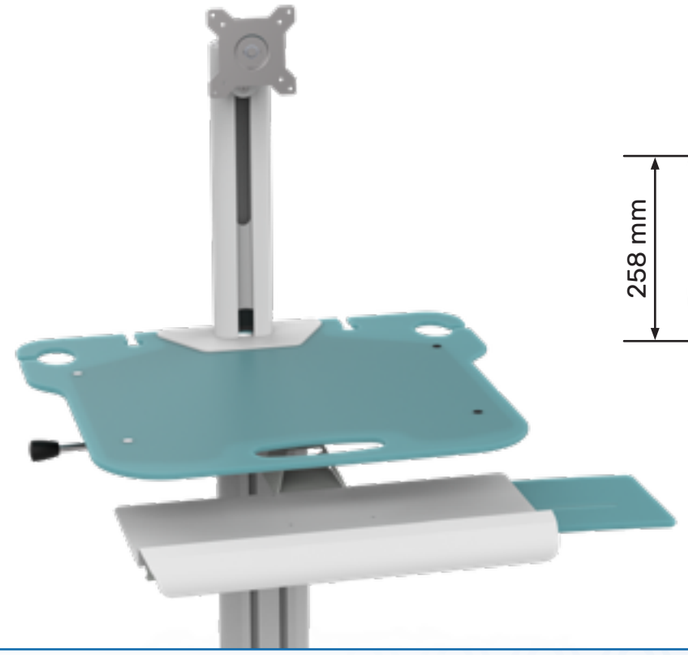

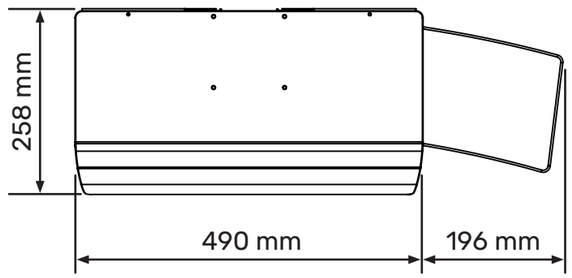

Click and Scan

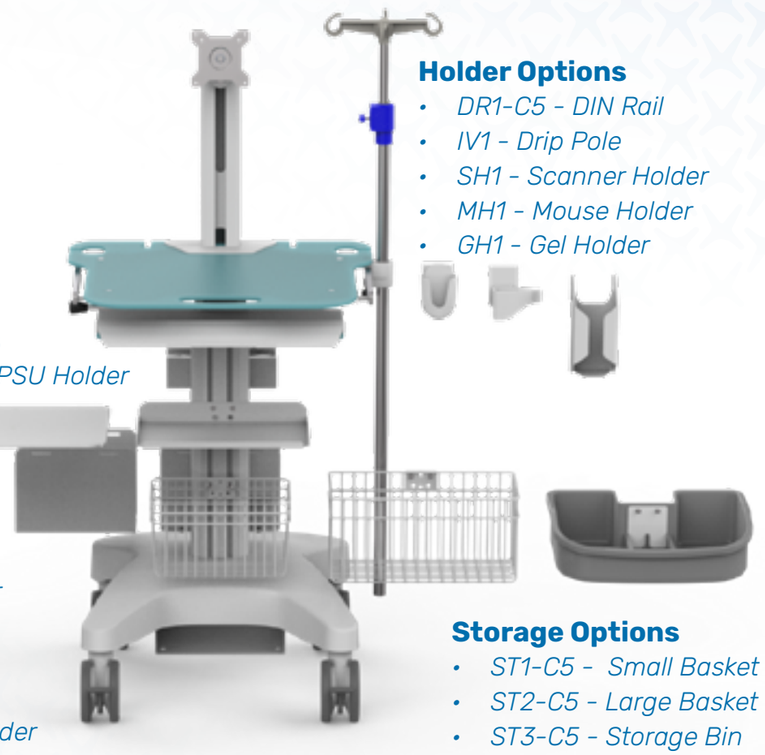

Holder Options
- *DR1-C5 - DIN Rail*
- *IV1 - Drip Pole*
- *SH1 - Scanner Holder*
- *MH1 - Mouse Holder*
- *GH1 - Gel Holder*

Shelf Options
- *S1-C5 - Shelf*
- *S2-C5 - Shelf*
- *S3-C5 - Shelf*

PSU Options
- *PSH1-C5 - PSU Holder*

CPU Options
- *CPU1-C5 - Small CPU Holder*
- *CPU2-C5 - Medium CPU Holder*

Isolation Transformer Holder Option
- *ITH1 - Isolation Transformer Holder*

Storage Options
- *ST1-C5 - Small Basket*
- *ST2-C5 - Large Basket*
- *ST3-C5 - Storage Bin*

More accessories information see 86-87 page

RHI-4-P

Powered Rhino Cart

CART DATA

- ***The cart height is 775 mm or 1200 mm (adjustable column height) and 75/100 mm display mount.***
- ***616 diameter Base and optional 125mm wheel.***
- ***Max load capacity 80 kg / 176.3 lbs.***

All pictures shown are for illustration purpose only.

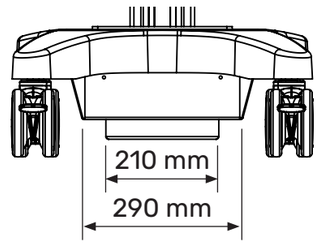

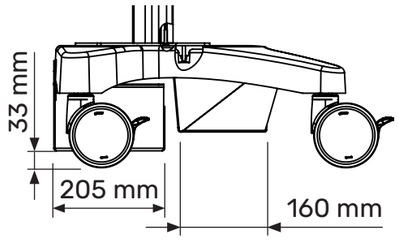

Battery health feedback
LED Indicator on
the Work Surface

Battery health feedback
Service related conditions
on the Display

Click and Scan

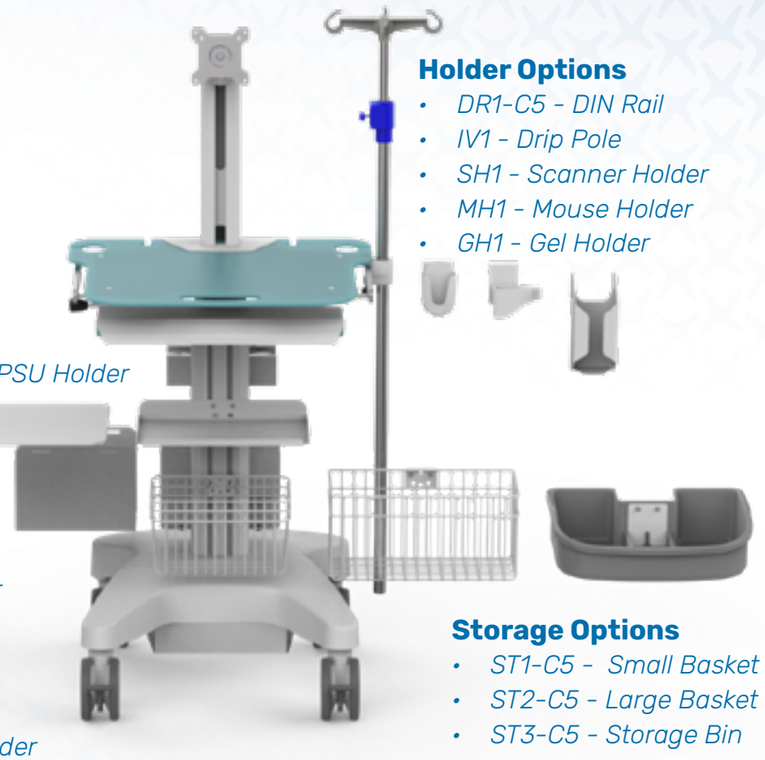

Holder Options
- *DR1-C5 - DIN Rail*
- *IV1 - Drip Pole*
- *SH1 - Scanner Holder*
- *MH1 - Mouse Holder*
- *GH1 - Gel Holder*

Shelf Options
- *S1-C5 - Shelf*
- *S2-C5 - Shelf*
- *S3-C5 - Shelf*

PSU Options
- *PSH1-C5 - PSU Holder*

CPU Options
- *CPU1-C5 - Small CPU Holder*
- *CPU2-C5 - Medium CPU Holder*

Isolation Transformer Holder Option
- *ITH1 - Isolation Transformer Holder*

Storage Options
- *ST1-C5 - Small Basket*
- *ST2-C5 - Large Basket*
- *ST3-C5 - Storage Bin*

More accessories information see 86-87 page

RHI-4-E

EKG - DT100 Cart

CART DATA

- ***The cart height is 775 mm or 1200 mm (adjustable column height) and 75/100 mm display mount.***
- ***616 diameter Base and optional 125mm wheel.***
- ***Max load capacity 80 kg / 176.3 lbs.***

All pictures shown are for illustration purpose only.

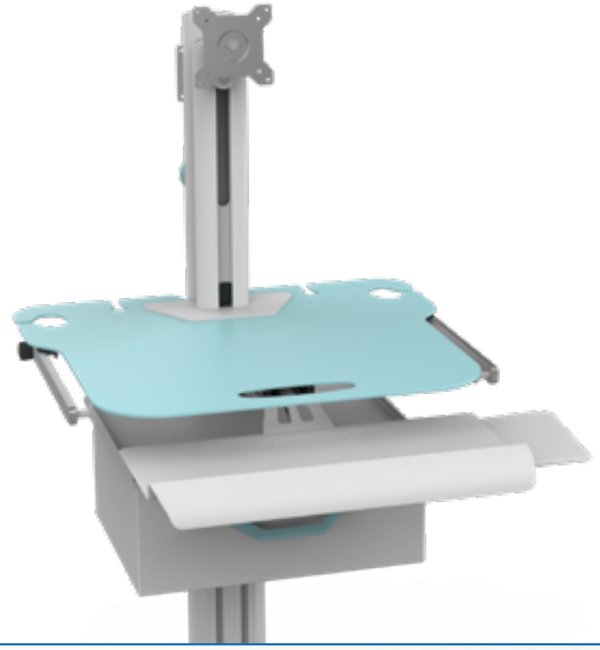

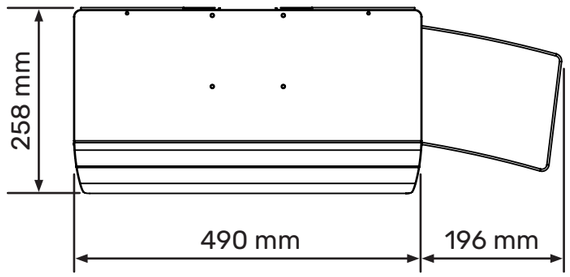

Click and Scan

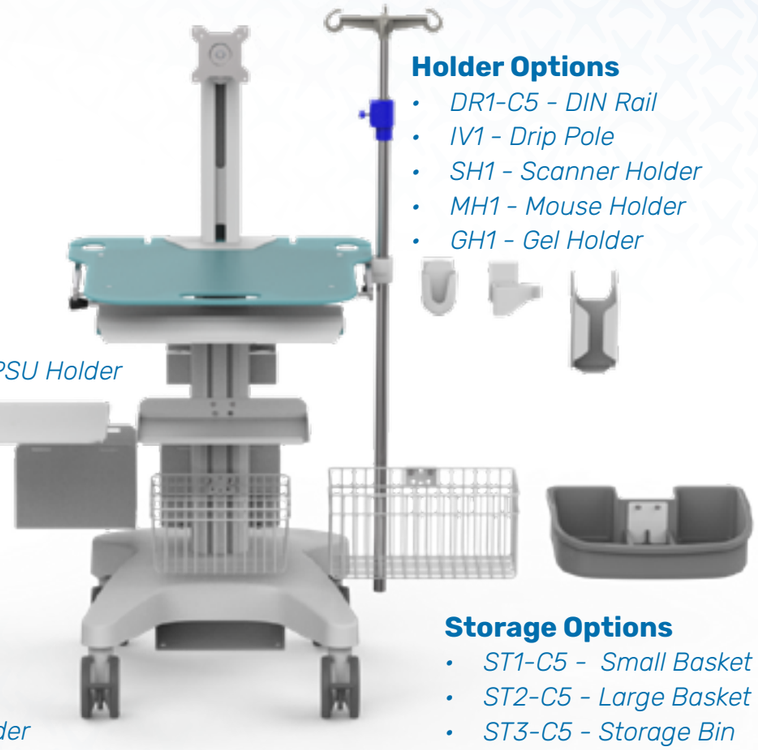

Holder Options
- *DR1-C5 - DIN Rail*
- *IV1 - Drip Pole*
- *SH1 - Scanner Holder*
- *MH1 - Mouse Holder*
- *GH1 - Gel Holder*

Shelf Options
- *S1-C5 - Shelf*
- *S2-C5 - Shelf*
- *S3-C5 - Shelf*

PSU Options
- *PSH1-C5 - PSU Holder*

CPU Options
- *CPU1-C5 - Small CPU Holder*
- *CPU2-C5 - Medium CPU Holder*

Isolation Transformer Holder Option
- *ITH1 - Isolation Transformer Holder*

Storage Options
- *ST1-C5 - Small Basket*
- *ST2-C5 - Large Basket*
- *ST3-C5 - Storage Bin*

More accessories information see 86-87 page

RHI-O-N

Equipment Cart

with Isolation Transformer

CART DATA

- ***The cart height is 1080mm.***
- ***616 diameter Base and optional 125mm wheel.***
- ***Max load capacity 80 kg / 176.3 lbs.***

All pictures shown are for illustration purpose only.

Click and Scan

Holder Options

- *DR1-C5 - DIN Rail*
- *IV1 - Drip Pole*
- *SH1 - Scanner Holder*
- *MH1 - Mouse Holder*
- *GH1 - Gel Holder*

Shelf Options

- *S1-C5 - Shelf*
- *S2-C5 - Shelf*
- *S3-C5 - Shelf*

PSU Options

- *PSH1-C5 - PSU Holder*

CPU Options

- *CPU1-C5 - Small CPU Holder*
- *CPU2-C5 - Medium CPU Holder*

Storage Options

- *ST1-C5 - Small Basket*
- *ST2-C5 - Large Basket*
- *ST3-C5 - Storage Bin*

More accessories information see 86-87 page

Rhino range accessories

Mounting options

Display Mount
DM1

Tablet Mount
TM1

Dual Display Mount
DM5

Camera Mount
CM1

Camera Mount
CM2

Twin Screen Mount
TSM1

Laptop Mount
LM1

Keyboard Tray options

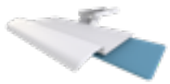
Keyboard Tray 2
KB2

CPU Mount options

CPU Mount Small
CPU1-C5

CPU Mount Medium
CPU2-C5

CPU Mount Big
CPU3-C5

Holder options

Mouse Holder
MH1

Scanner Holder 1
SH1

Scanner Holder 2
SH2

Gel Holder 1
GH1

Gel Holder 2
GH2

Gel Holder 3
GH3

Cable Hook
CH1-C5

Rubber Scanner Holder
SR1

Rubber Scanner Holder
SR2

Storage options

Small Basket
ST1-C5

Large Basket
ST2-C5

Storage Bin
ST3-C5

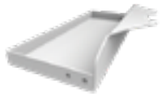
Cable Holder
ST4-C5

Drawer options

Small Drawer
D1

Small Drawer
D2

Large Drawer
D5

Large Drawer
D6

Small + Large Drawer
D8

Drip Pole Clamp and Drip Pole options

Drip Pole Clamp 12,7mm
DRC1

Drip Pole Clamp 25mm
DRC2

Drip Pole
IV1

PSU Holder options

PSU Holder 1
PSH1-C5

PSU Holder 2
PSH2-C5

PSU Holder 4
PSH4-C5

PSU Holder 5
PSH5-C5

PSU Holder 7
PSH7-C5

Shelves options

Shelf 1
S1-C5

Shelf 2
S2-C5

Shelf 3
S3-C5

Shelf 4
S4-C5

Shelf 5
S5-C5

Shelf 6
S6-C5

Shelf 7
S7-C5

Din Rail options

Din Rail Kit
DR1-C5

Din Rail
DR3-C5

Din Rail
DR7-C5

Work top options

Work Surface
WS7

Work Surface
WS8

Work Surface
WS9

Work Surface
WS10

Component options

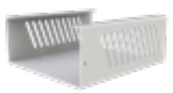
Isolation Transformer Holder
ITH1

1090 mm column
C5H-L5
110N / 140N / 170N / 200N / 250N / 300N
Gas Spring

1090 mm column
C5H-L5
Electric lift option

830 mm column
C4-L2
Fix height

Anti-static 100 mm Wheel
GJM3-100-2-W6

Anti-static 125 mm Wheel
GJM3-125-2-W7

DRAWERS

CUSTOM COLOR

Drawers suitable for Chameleon 4, 6 and Rhino ranges

Easy to clean surfaces

Optional ISO Tray

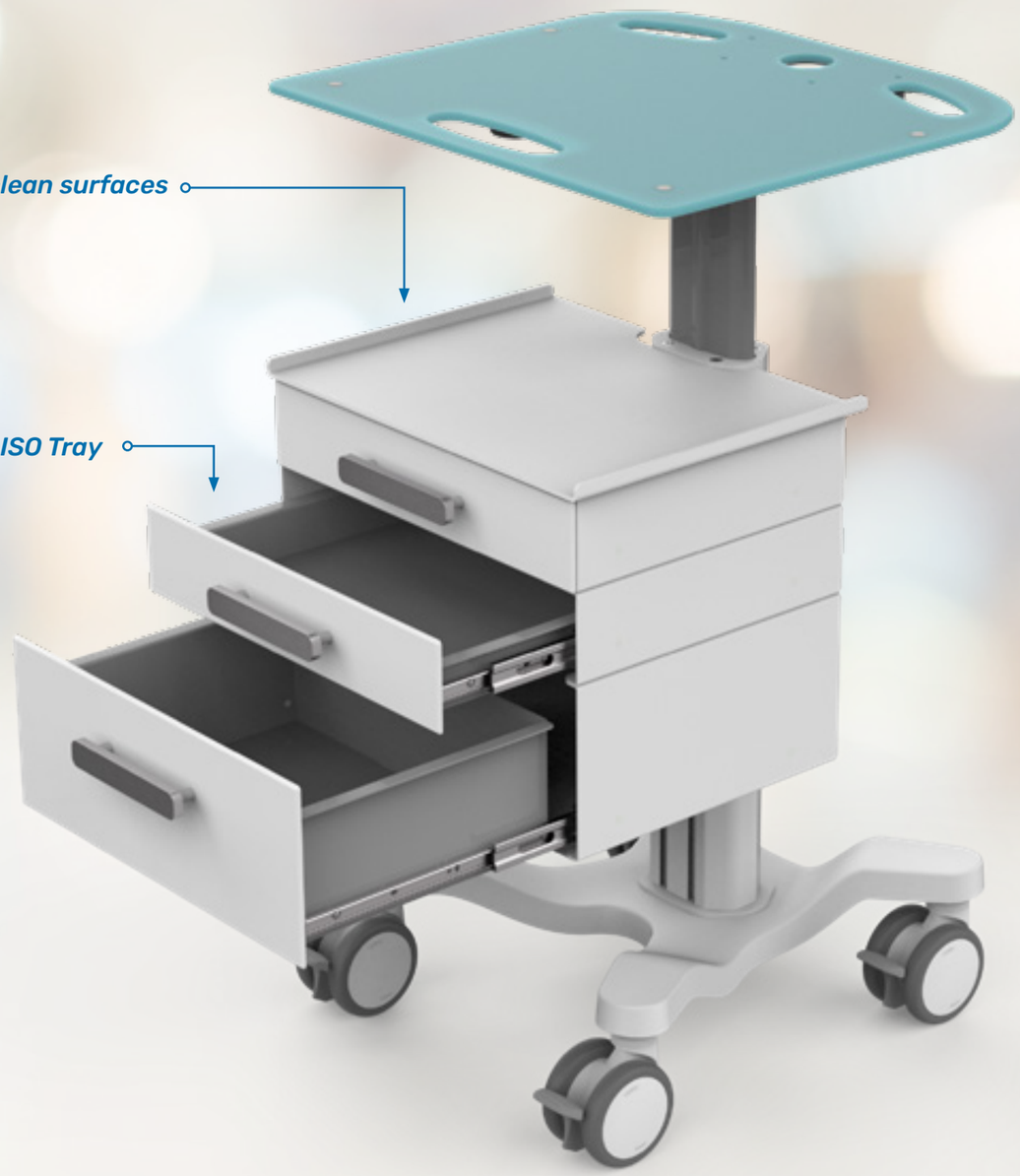

Small Drawer (80mm)

D1

D2

D3

D4

Large Drawer (160mm)

D5

D6

D7

Small + Large combination

D8

D9

D10

D11

ISO Tray 400x300 mm

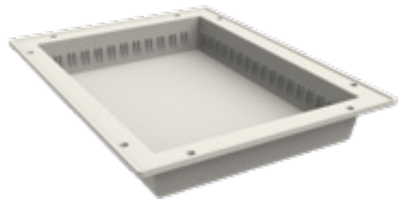

Tray for Partitons
300x400x50mm
See related partitions for tray

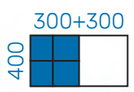

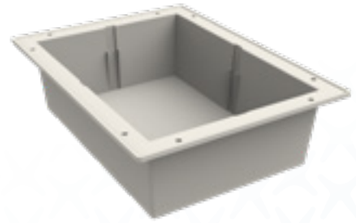

Tray
300x400x100mm

SNAKE
RANGE

Articulated Joint - *Constant force joint with the ability to adjust the force. Enables a safe setup.*

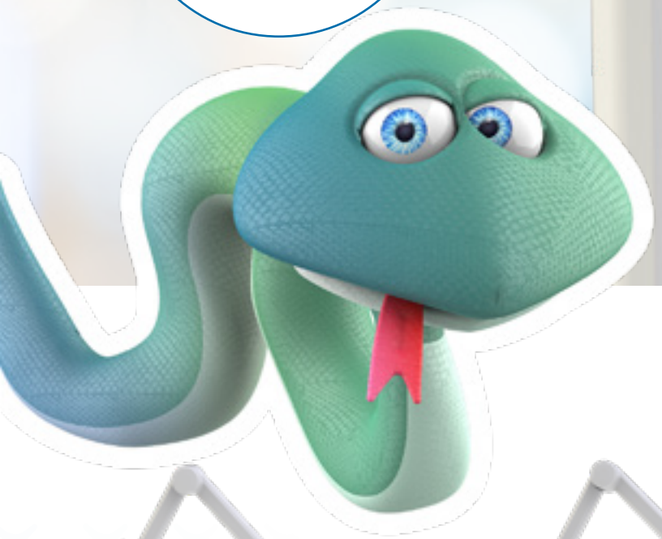

Click and Scan

SIMPLE ARM

TUBE HOLDER ARM

TABLET MOUNT ARM

All pictures shown are for illustration purpose only.

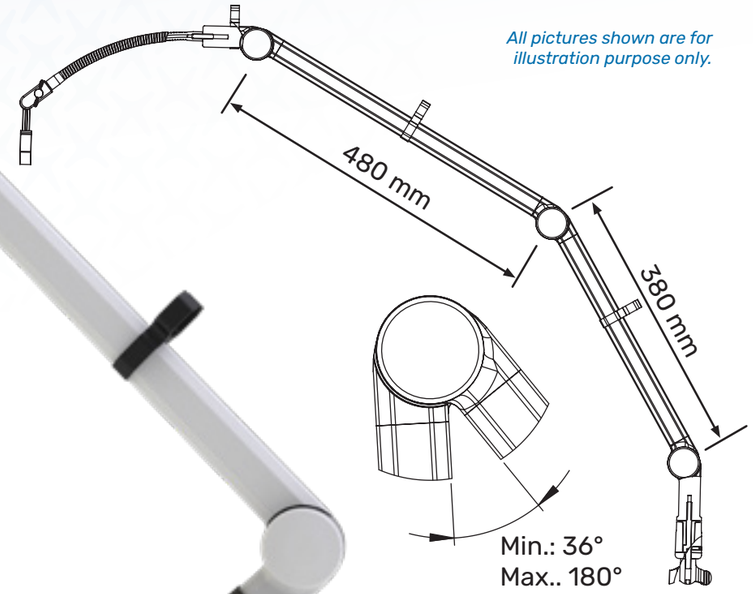

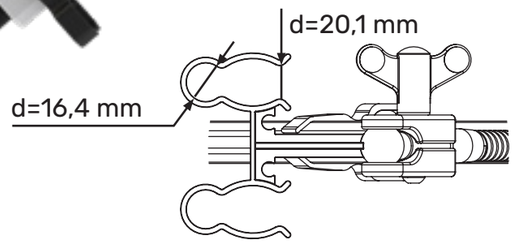

Tube Holder

Allows for easy installation without damage to the tubes or cables to be supported.

On Flex Arm

On the Arm Body

Mounting options

Allows for easy installation without damage to the tubes or cables to be supported.

On DIN Rail

On the Column

WALL MOUNT SOLUTIONS

WALL MOUNT FOR DISPLAY AND KEYBOARD

CUSTOM COLOR

Following the lead of the industry leaders we now have compatible solutions to fit into existing wall chanels. The Arms have 180 degrees rotation and hidden cable management. The arms are supplied assembled and are very easy to use and clean.

Display and Keyboard Mount Height adjustable
WA-H-KD

Display and Keyboard Mount Double Extension
WA-F-KD-E2

ARMS FOR PHILIPS DEVICES

Range of Arms designed to fit commonly used Philips medical devices.

Philips MX/MP Arm
3-0046

Philips Efficia Arm
3-0047

SINGLE AND DOUBLE ARMS

Suitable for displays and medical equipment, hidden cable management and customisation is available.

No extension VESA Mount
WA-D

Single extension VESA Mount
WA-F-D-E1

Double extension VESA Mount
WA-F-D-E2

Cable management

Organised cable management enables easier cleaning process.

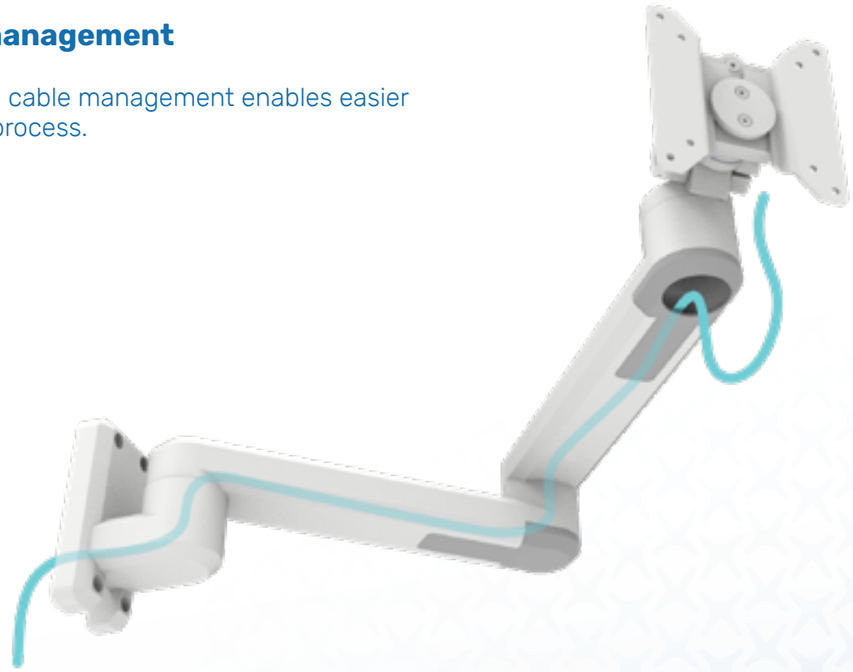

WALL MOUNT SOLUTIONS

SIT/STAND WALL MOUNT

Work station fixed on the wall. Allows busy areas to be used without consuming significant floor space.

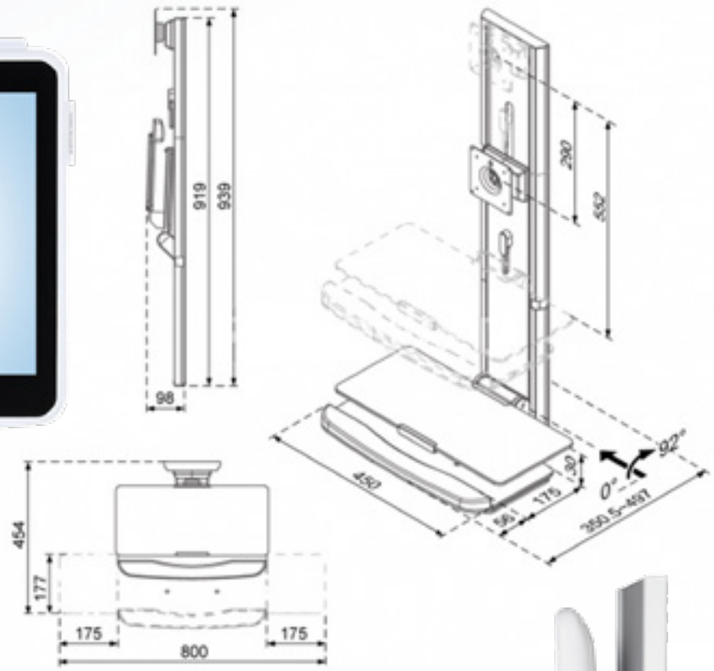

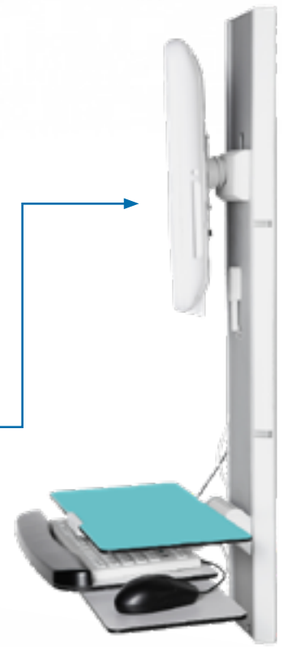

Sliding Display Mount

Foldable sliding Keyboard Tray with two sided Mouse Holder

DESK STANDS

Click and Scan

CUSTOM COLOR

FEATURES

- *Height adjustable*
- *Tilt and Rotation*
- *Integrated Cable Management*

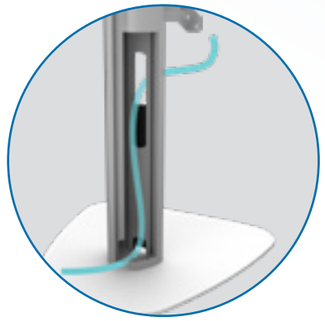

Display Stand
DS2

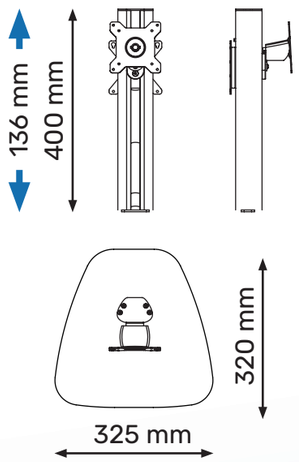

Front-Back Display Stand
DS3

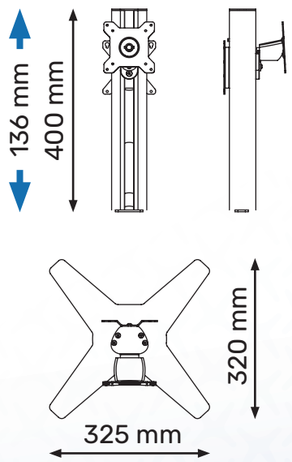

Tablet Stand
TS1

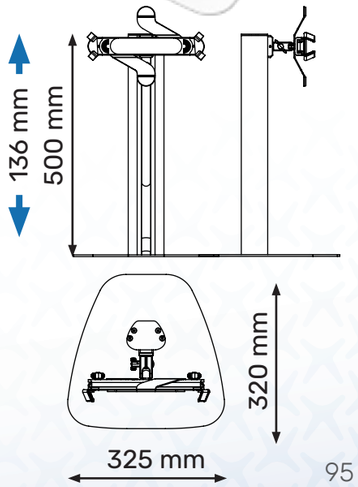

POWER SOLUTIONS

Click and Scan

MEDICAL ISOLATION TRANSFORMERS

For added safety when using medical technology.

Isolation Transformer
mounted with hidden cabling

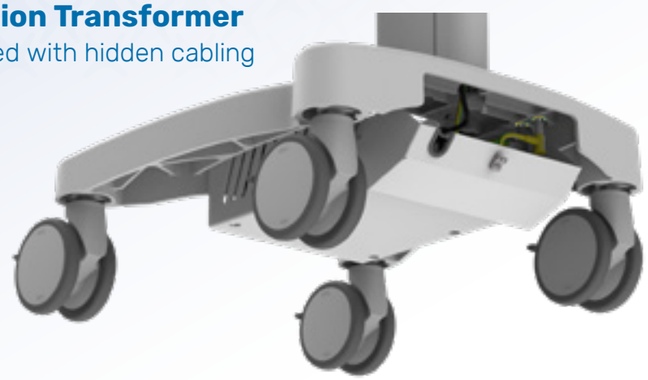

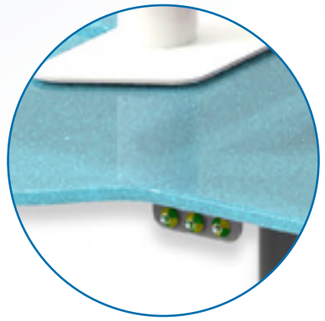

Optional POAG Studs
mounted under WorkSurface

Isolation Transformer
OPTION 1
REOMED 300VA A-50 Series

Isolation Transformer
OPTION 2
REOMED 600VA A-50 Series

Isolation Transformer
OPTION 3
REOMED 1000VA A-50 Series

Potential Equalization Cable
3m / 5 m

Medical Power Strip

Potential Equalization Socket

Potential Equalization Pin
15 mm

Potential Equalization Pin
25 mm

PWP POWER SYSTEM

POWER PACK

Heavy Duty LiPo4 Power Pack suitable to fit any cart with built in charger and AC inverter allow easy installation of suitable equipment. Available in 512WH or 240WHsizes.

Autonomy | Easy to Use | Easy to Clean | Multi Purpose | Durable

DIGITAL FEEDBACK

WORK SURFACE - LED Indicator

Easy to see, easy to understand battery charge indicator.

DISPLAY - Service Related Conditions

Intelligent fuel gauge report run time and battery health.
Datalogging and fleet management software is built into the product as standard.

Service related alarms, such as overload, over temperature, replace battery etc., will cause one of the RUI Service LEDs to flash.

COMPONENTS SALES

WORK SURFACE

Our standard range of work surfaces can be fitted to any of our carts or alternatively fitted to your design. Through customers requests, these are the most requested sizes and functions of the work surface integrating handles, scanner holders and cable holders.

ALUMINIUM EXTRUSIONS

6mtr lengths of aluminium profile, can be supplied as processed or raw.

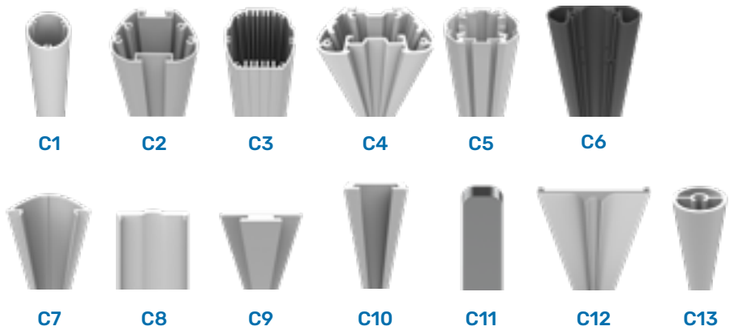

C5H

BASE

Bases are cast aluminium and can be supplied finished or raw and are available to purchase separately, can be finished in any colour. Weight is defined with no height adjustment with loaded weight upto 1mtr from the floor.

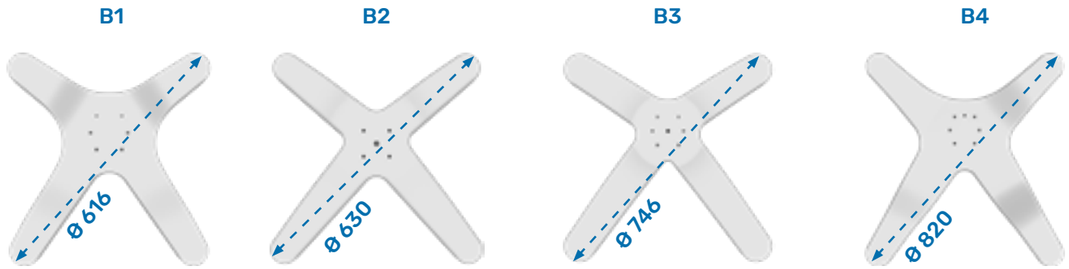

Max Load 36kg | Max Load 22kg | Max Load 65kg | Max Load 85kg

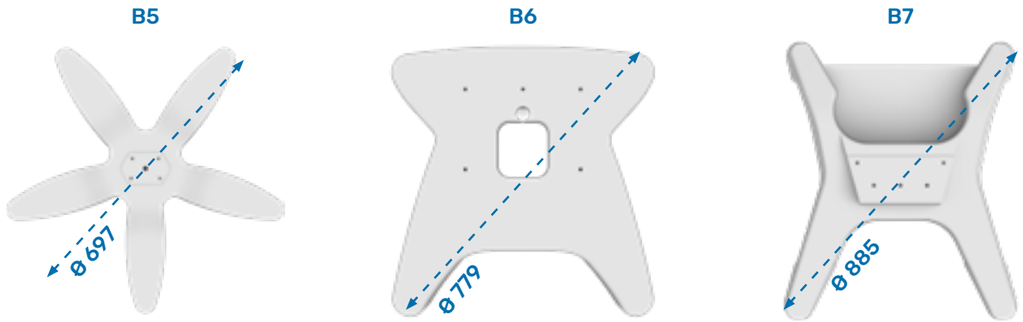

Max Load 40kg | Max Load 80kg | Max Load 90kg

WHEELS

We offer 2 versions of Twin wheels, economy range and the premium range from Steinco plus ESD options. All wheels are supplied with M12 thread.

Standard wheel *ø 75* | **Standard wheel** *ø 100* | **Strandard wheel** *ø 125* | **Premium wheel** *ø 100* | **Premium wheel** *ø 125*

Medical Cart Company Ltd.

Hungary, 2051 Biatorbágy
Vendel park, Tormásrét utca 12.

Tel: +36 23 920 790
Tel: +36 30 841 4353

www.medicalcartcompany.hu

Certified System certop ISO 9001

03 November 2022 v 2.0